Temposonics®

Absolute, Non-Contact Position Sensors

MTS® SENSORS

Document Part Number
551303 Revision A

R-Series Catalog

Contents

THE COMPANY

The World of MTS

Following the founding of **MTS Systems Corporation** in 1951, the company rapidly developed into a leading supplier of intelligent hardware and software products in the fields of test and simulation systems and in measuring and automation technology. Today MTS Systems Corporation has over **2.000 employees** worldwide – **300** of whom are employed by **MTS Sensors** at three sites in the **USA (Cary, N.C.), Germany (Lüdenscheid)** and **Japan (Tokyo).** At MTS, intensive basic research is efficiently merged with a consistent focus on practical requirements. The results are innovative solutions for a wide range of potential industrial and non-industrial applications.

Headquarters
MTS Systems Corporation, Minneapolis, USA

MTS Sensor Technologie
Lüdenscheid, Germany

MTS Sensors Division
Cary (North Carolina), USA

MTS Sensors Technology Corp.
Tokyo, Japan

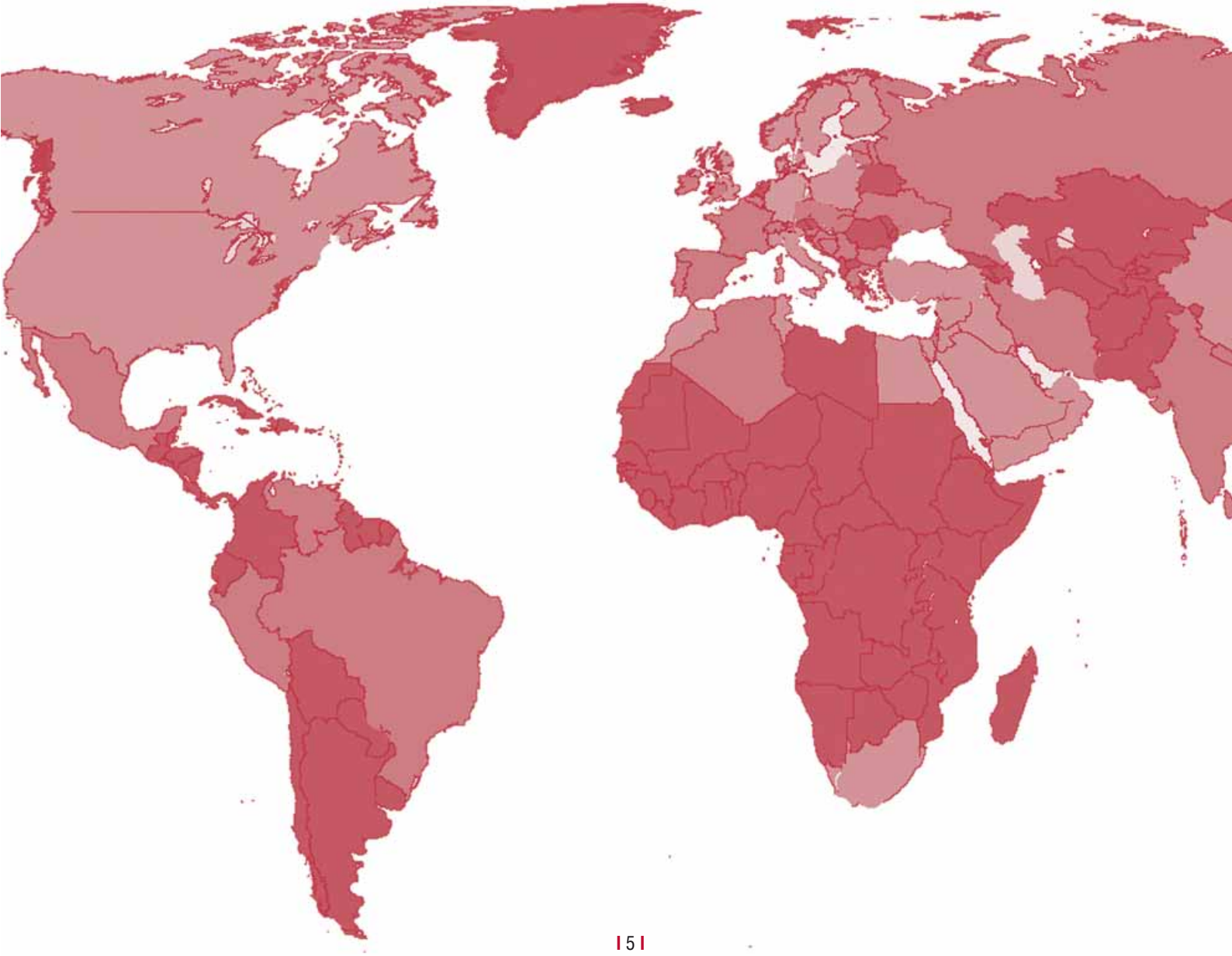

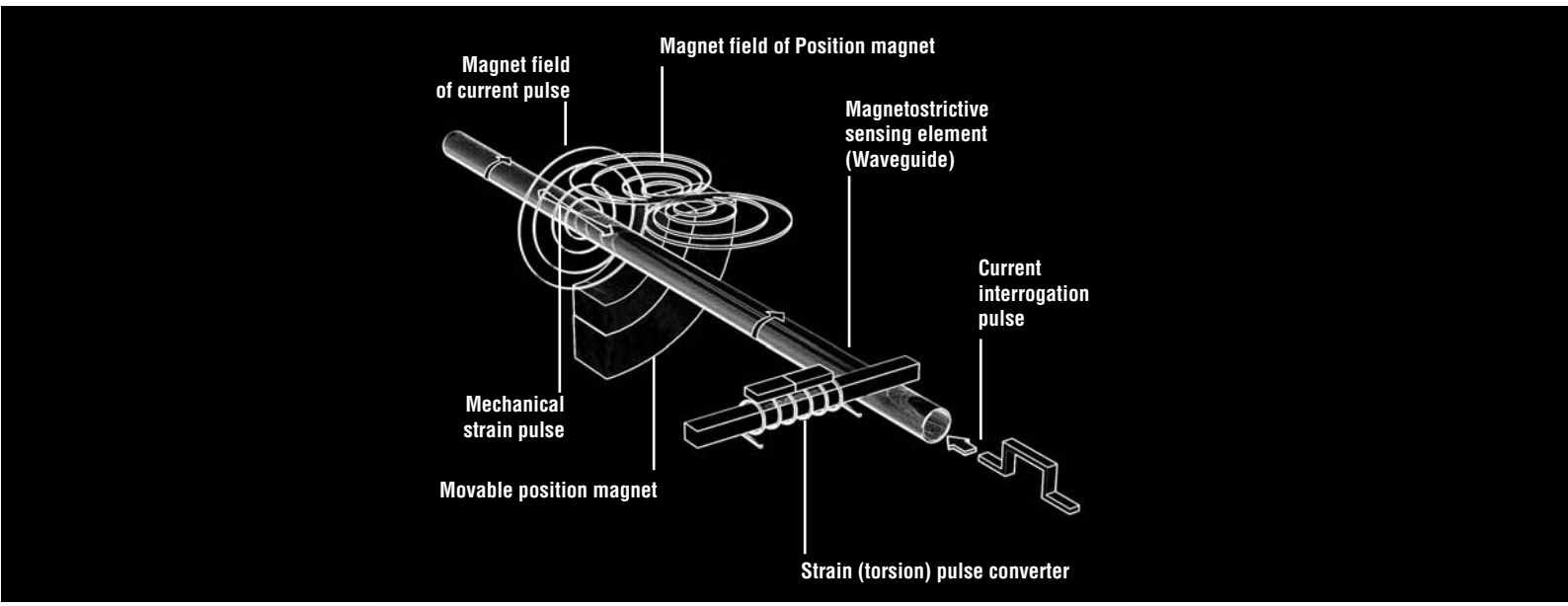

MAGNETOSTRICTIVE PRINCIPLE

Technology at its best

The best linear position sensors provide absolute position measurement resulting in higher productivity and greater safety for machine and automation devices. MTS linear position sensors outperform the competition, deliver accuracy and reliability under the most difficult conditions, resulting in excellent value for our customers. Our success is due to 30 years of technology leadership, vertically integrated manufacturing processes and unsurpassed levels of support. MTS Sensors was the first to realize the promising advantages for linear position measurement contained in the magnetostrictive measuring principle developed by J. Tellermann. Tellerman's original design, was used to develop Temposonics® brand sensors: the first magnetostrictive position sensors, a technology which guarantees precision and reliability without equal.

Magnetostriction - how it works

The heart of MTS sensors is the ferromagnetic measuring element, also known as the waveguide, and a movable position magnet that generates a direct-axis magnetic field in the waveguide.

When a current or interrogation pulse passes through the waveguide, a second magnetic field is created radially around the waveguide. The interaction between the magnetic field in the waveguide and the magnetic field produced by the position magnet generates a strain pulse which travels at a constant ultrasonic speed from its point of generation, the measurement point, to the end of the waveguide where it is transformed into an electric pulse in the sensor element.

The resulting signal is processed by the specialized electronics of the Temposonics® sensor.

With our extensive know-how of ferromagnetic materials, magnetic effects and ultrasonic processes, MTS remains unrivalled in performance standards for non-contacting position measurement of the highest precision.

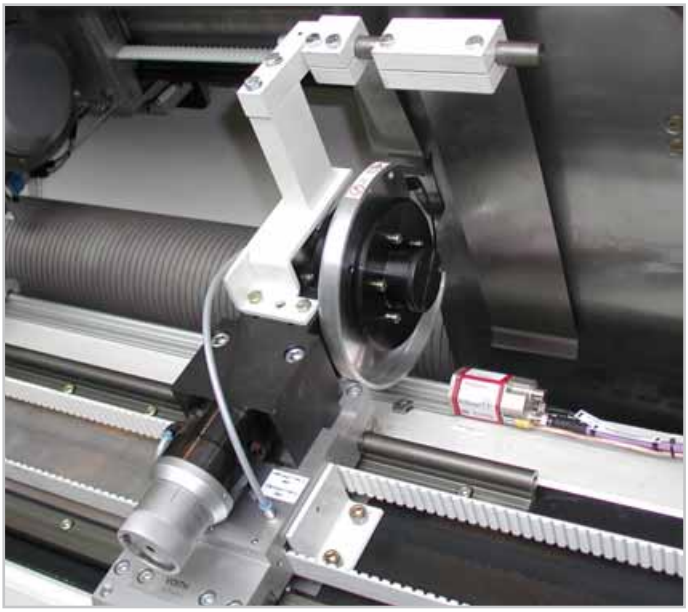

APPLICATIONS

Magnetostriction: The best choice for your application
You are under constant pressure to improve your products, reduce your costs and maintain a competitive edge. The choice you make must provide accuracy and repeatability. You need modular solutions that can adapt to your specific application and you need a price/performance ratio that delivers value.
By choosing MTS Temposonics® sensors, you're choosing the leader in magnetostrictive sensors.
And that means you have a huge competitive advantage.

Increased productivity through innovation
MTS sensors do more than just measure position. Intelligent electronics move some control functions to the sensor, dramatically increasing productivity. When needed, MTS can tailor application-specific software to meet your needs.

Small sensor - great effect
MTS Temposonics® position sensors are used in countless industrial and non-industrial applications, from packaging machines through drinks bottling and canning plants right up to plastics molding machines and steel rolling mills.
The precision and reliability of Temposonics® sensors offer huge benefits that result in high-quality products and efficient processes.

Amazing, where Temposonics® can be found....
Temposonics® sensors are often found wherever position must be measured precisely. Our engineers love the challenges of unusual applications, and they have helped customers solve many difficult applications around the world. In the truest sense of the word, Temposonics® paved the way for the planning of the bridge over the Great Belt in the Baltic Sea and the Soccer Stadium "ArenaAufSchalke" in Gelsenkirchen (Germany). Temposonics® sensors also helped in the salvage of the capsized Russian submarine "Kursk".

Temposonics® rod-in-cylinder: Thinking ahead
In order to enable user-friendly use of superior Temposonics® sensor technology in cylinders, MTS has further enhanced the rod-style version. An innovative modular design eliminates the need to break the high-pressure hydraulic seal of the fluid system when installing or replacing the sensor cartridge. The sensor's pressure housing can stay permanently mounted in the cylinder and the basic sensor can be easily removed. This capability significantly reduces maintenance costs and potential downtime.

A Liquid Level Sensor....
By simply mounting the position magnet into a float, the application range of R-Series sensors extends substantially. These highly precise float gauges supply exact level values. In addition, a second float can be added to measure "interface levels" simultaneously (i.e. interface of water / oil, etc.).

Laser controlled quality:
Up to 1000 measuring points per mm!

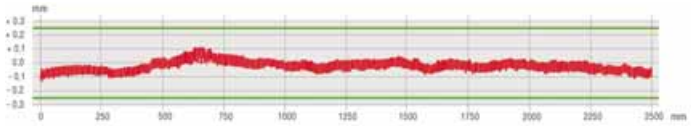

QUALITY

Precision is our strength

Maximum precision and uncompromising quality in the service of the customer - those are the characteristic elements of the MTS philosophy. Focused on these targets, MTS Sensors has been setting standards in measuring and automation technology worldwide for **three decades.** Our ultramodern, **fully automated** production technology guarantees the consistently high quality and precision of Temposonics® position sensors so that they can reliably pass our stringent quality requirements. Shock and vibration resistance and EMC tests, for example, are monitored on external test facilities and during the final inspection, each sensor passes automatic high profile laser interferometer measuring tables which examine and document linearity in up to **0,5 µm** steps.

Our engineers enthusiastically take up every challenge and develop position measuring solutions of exemplary precision based on magnetostriction, even for the most unusual applications. Over the decades, we have built up a wealth of experience which we put into practice in the form of intelligent sensors and software for our customers in a wide variety of industrial sectors. And our quality requirements extend to our comprehensive after-sales service.

QUALITY ASSURANCE

The quality of our position sensors and liquid level transducers is our mission and it is black on white certified. It proves itself in countless applications world-wide every day. MTS co-operates with research institutes, professional associations from the range of the sensor technology and user organizations, in order to offer the customers sensors with a maximum of quality and innovations.

PROFI BUS

Certificate

PROFIBUS Nutzerorganisation e.V. grants to

MTS Sensor Technologie GmbH
Auf dem Schüffel 9; 58513 Lüdenscheid, Germany

the Certificate No.: **Z01255** for the PROFIBUS Slave:

Product Name: **MTS R-Series**
Revision: **22Sep06; SW/FW: SW05; HW: HW04**
GSD: **MTSR04C3.gsg; File Version: 22.Sep.06**

This certificate confirms that the product has successfully passed the certification tests with the following scope:

☑	DP-V0	MS0, Sync, Freeze, Set_Slave_Add
☐	DP-V1	
☐	DP-V2	
☐	Profile	
☑	Physical Layer	RS485

Test Report Number: **481-1**
Authorized Test Laboratory: **Siemens AG, Fürth, Germany**
Expiry date of Certificate: **March 14, 2010**

The tests were executed in accordance with the following documents:
"Test Specifications for PROFIBUS DP Slaves, Version 3.0 from November 2005"
This certificate is granted according to the document "Framework for testing and certification of PROFIBUS products".

Karlsruhe, May 16, 2007

(Official in Charge)

PROFI BUS

Board of PROFIBUS Nutzerorganisation e. V.

(E. Küster) (Prof. K. Bender)

CERTIFICATE

DQS GmbH
Deutsche Gesellschaft zur Zertifizierung von Managementsystemen

hereby certifies that the company

MTS Sensor Technologie GmbH & Co. KG

Auf dem Schüffel 9
D-58513 Lüdenscheid

for the scope

Development and manufacturing of linear position transducers and liquid level measuring systems based on the magnetostrictive principle

has implemented and maintains a

Quality Management System.

An audit, documented in a report, has verified that this quality management system fulfils the requirements of the following standard:

DIN EN ISO 9001 : 2000
December 2000 edition

This certificate is valid until	2009-12-06
Certificate Registration No.	003095 QM
Frankfurt am Main	2006-12-07

Ass. iur. M. Drechsel — Dipl.-Ing. S. Heinloth

MANAGING DIRECTORS

D-60433 Frankfurt am Main, August-Schanz-Straße 21

IQNet

GLOSSARY

A

Absolute position
The sensor's output indicates the position relative to an absolute (fixed) reference point. Immediately after power is applied, there is no need to 'rehome' the sensor as you would with one that provides an incremental position output.

Asynchronous Mode
Asynchronous data communication occurs when data is sent from one device with its own clock to another device with a separate clock. When the Temposonics® R-Series SSI position sensor is used in the asynchronous mode, the sensor takes measurements at its fastest internal interrogation rate (length dependent) and provides the information upon request.

D

Drift
see also Warm-up and Temperature Coefficient.
Drift is the change in the output signal or output value under enviromental impact e.g. time or temperature.

F

Full Scale (F.S.)
(see range)

G

Gradient
The gradient is the inverse of the rate at which a strain pulse propagates through the magnetostrictive waveguide, (velocity of propagation ≈ 2780 m/s). The gradient values will vary slightly from sensor to sensor. The actual measured gradient values for some sensors are indicated on the label attached to the sensor.

H

Hysteresis
The difference in indicated position for the same point along a stroke length when reached from **opposing directions.**

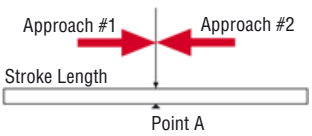

Note: The hysteresis specification for Temposonics® position sensors is minimal and can, in most applications, be ignored.

L

Load Impedance
The impedance presented to the output terminals of a transducer by the associated external circuitry.

M

Multi-Position measurement
Multiple magnets located at several positions along the stroke can be used to measure multiple positions simultaneously. MTS Temposonics® R-Series products can measure 20 positions on a single sensor.

N

Non-contact
MTS Temposonics® sensors utilize a non-contact sensing technology that results in longer-lasting sensors with greater reliability and no mechanical wear.

Non-linearity
The degree that the indicated position of the magnet at points along the stroke length of the sensor varies from the actual physical position. In magnetostrictive sensors, this variability is caused by minute differences in the propagation rate of the return signals through the waveguide medium. Non-linearity is expressed in absolute error or as a percentage of the active stroke length.

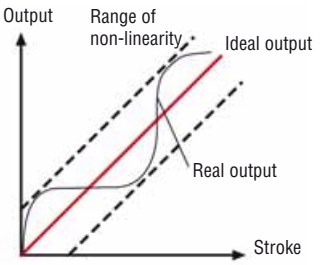

O

Outputs
1. Digitally-derived analog output: The Temposonics® R-Series product line offers a digitally-derived analog output. A digital position count of 16 bits is converted to an analog signal (voltage or current) via a digital/analo gue converter.
2. Digital output: The Temposonics® R-Series product line provides digital output in either a SSI, CANbus, DeviceNet®, Profibus or EtherCAT. An internal counter is used to precisely measure the time interval between the launching of an interrogation pulse and the receipt of a return signal. The time interval, detected in counts, is then supplied to the customer's interface via the above chosen format or protocol.

R

Range
The measurands, over which a sensor is intended to measure, specified by their upper and lower limits.

Repeatability
The deviation in indicated position when a point along a stroke length is approached repeatedly from the same direction. For an example, see the illustration below.
If you leave point "A" and then return to it from the same direction as before, the change in indicated position between the two readings is described by the repeatability specification. For magnetostrictive sensors, repeatability is usually equal to resolution.

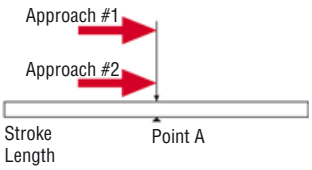

Resolution
The term resolution describes the smallest incremental change in position along the stroke length that can be detected and indicated in an output. For digital systems, such as the R-Series, resolution is a discrete value corresponding to one binary bit out of the total number of bits used in the output.

Ambient Condition
Environmental conditions, under which transducers must commonly operate, which have been established as follows:
a) temperature: 25 °C (± 10)
b) relative humidity: 90 % or less.
Tolerance closer than shown are frequently specified for transducer caibration and test environments.

T

Temperature Coefficient (TC)
Temperature Coefficient (TC) is expressed as ppm/°C (ppm = parts per million). TC is the degree to which the indicated position is affected by ambient temperature changes.

Temperature drift is:

$$\frac{(\text{TC x Full Scale Output x Ø temperature})}{10^6}$$

or

$$\frac{(25\ \text{ppm x 10 VDC x 5 °C})}{10^6} = 1{,}25\ \text{mV}$$

Example (Sensor with analog output):
- Output: 0 to 10 VDC
- Stroke length: 200 mm
- Temperature change: 5 °C
- TC= 25 ppm/°C

If the indicated output at 200 mm is 10 VDC, the potential change in indicated output per degree in Celsius. Temperature change is 1,25 mV or 0,025 mm for a 5 °C rise.

W

Warm-up Period
The time required for the output to stabilize following power-up of the sensor. This error is characterized by a parallel displacement of the entire calibration curve.

GENERAL DATA R-Series Profile and Rod

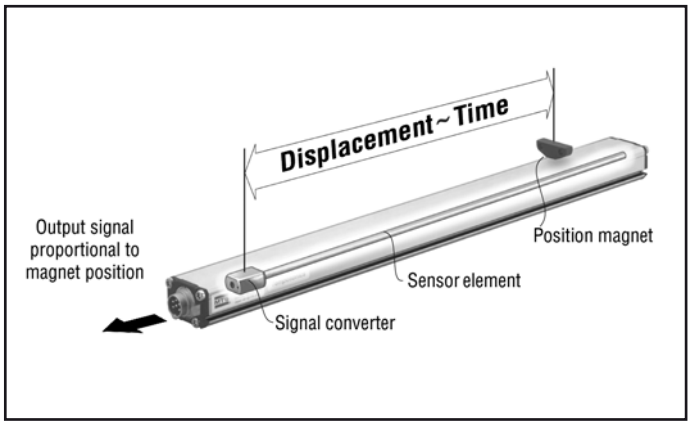

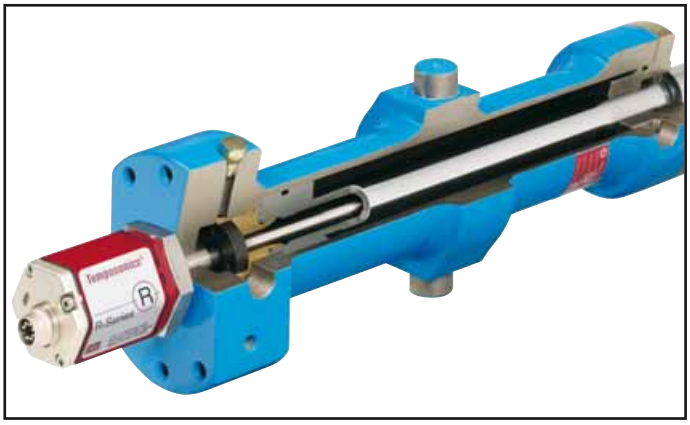

Function
Non-Contact technology - an external movable magnet marks the position - of the absolute Temposonics® linear sensors eliminates the wear, noise and erroneous signal problems and guarantees the best durability without any recalibration.

Design enhances reliability
The extremely robust sensors are modular in mechanics and electronics design.
• A profile or rod-shaped sensor housing protects the sensing element which gives rise to the measurement signal.
• The sensor head accommodates the complete modular electronic interface with active signal conditioning. Double encapsulation ensures high operating safety and optimum EMC protection.
• The position transmitter, a permanent magnet - fixed at the mobile machine part - drives over the sensor's stroke contactlessly and starts measuring through the housing wall.

Temposonics® Profile: Rugged sensor in demanding environments
Temposonics®-RP perform reliability in even the most rugged industrial environment. The profile model has proved to be the ideal choice where extreme dirt and dust are encountered. Complete encapsulation in a profiled aluminum housing effectively protects the sensor element against damage. The sensor offers flexible mounting configurations and easy installation. Position measurement is wearless by means of magnet heads which require no power supply. Here you have a choice of two versions:
• A sliding magnet running in profile housing rails. Connection with the mobile machine part is via a ball jointed arm to take up axial forces.
• A floating magnet, mounted directly on the moving machine part, travels over the profile at a low distance. Its air-gap allows the correction of small misalignment at installation.

Temposonics® Rod: High pressure design
Just like the sturdy profile model, the rod design is also suitable for even the toughest industrial environments. Temposonics® RH with a pressure-resistant stainless steel flange and sensing rod is suitable for use in hydraulic cylinders and externally in all applications where space is a problem. High-precision position measurement is via ring or U-magnets travelling along the sensing rod without any mechanical contact.

Temposonics®

Absolute, Non-Contact Position Sensors

R-Series
Analog

Temposonics® RP and RH
Measuring length 50 - 7600 mm

100% field adjustable Null and Span

- **Rugged Industrial Sensor**
- **Linear and Absolute Measurement**
- **LEDs for Sensor Diagnostics**
- **Non-Contact Sensing with Highest Durability**
- **Superior Accuracy: Linearity better 0,01 % F.S.**
- **Repeatability 0,001 % F.S.**
- **Direct Analog Output, Displacement + Speed**
- **Dual Magnet Position Measurement**

Sensor Diagnostic Display

Integrated LEDs (green/red) provide basic visual feedback for normal sensor operation and troubleshooting.

Green	Red	Description
ON	OFF	Normal function
ON	ON	Magnet not detected, Wrong quantity of magnets
ON	Flashing	Magnet out of setup range
Flashing	ON	Programming mode

Output

Smart analog sensors provide direct analog outputs including voltage and current. All outputs allow 100 % adjustments of zero and span setpoints. Since the outputs are direct, no signal conditioning electronics are needed when interfacing with controllers or meters.

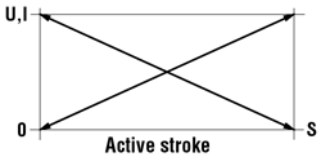

Availability

• Single Magnet Sensor provides one displacement output over the entire active stroke length and one velocity output with 1 magnet.
• Dual Magnets Sensor provides two identical displacement outputs; a separate output is provided for each of two magnets positioned along sensor length.

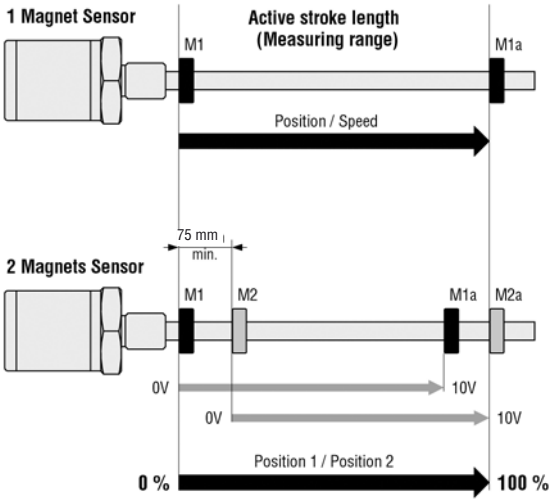

Sensor Field Programming

Temposonics® R-Series sensors are preconfigured at the factory by model code designation. If needed, MTS offers different external service tools for modifying sensor parameters inside the **active electrical stroke** (minimum 25 mm between setpoints) via the standard connection cable. There is no need to open the sensors electronics. Following tools are available:

1. Hand-Programmer R-Analog for 1 Magnet Sensor

for easy teach-in setups of measuring length and direction by moving the magnet on desired Null/Span positions and pushing the 0/100 % buttons.

Hand-Programmer R-Analog, Part No. 253 124

2. Cabinet-Programmer R-Analog

Cabinet-Programmer R-Analog completes the accessories program of MTS absolute position sensors. The unit can be used for adjusting a connected 1-magnet sensor via the leads, using a simple teach-in procedure in the field.

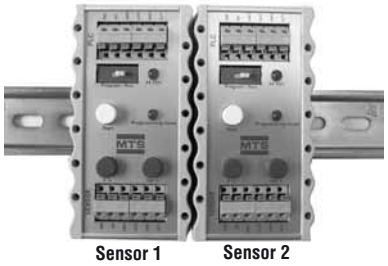

Cabinet-Programmer R-Analog, Part Nr. 253 408

10 x 55 x 31 mm

3. USB-Programmer R-Analog for 1 or 2 Magnets Sensors

This hardware converter is required to communicate via USB-port of a Windows PC to the sensor. Customized settings are possible by using the MTS programming software (CD-ROM) for:

- Zero/Span Magnet 1
- Zero/Span Magnet 2
- Velocity range
- Free assignment of outputs to measured position or velocity
- Error output value (e.g. magnet out of stroke)

Programming Kit, Part No. 253 134-1

(PC-Programmer, Power supply, USB-Cable, Sensor-Cable, Software)

Windows Sensor Programming

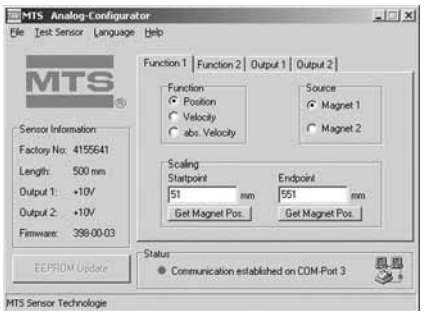

Technical Data

Input	
Measured variables	Position, Speed / Dual magnets position measurements
Measuring range	Profile: 50 - 5000 mm, Rod: 50 - 7600 mm
Output	
Voltage	0...10 / 10...0 / -10...+10 / +10...-10 VDC (min. load controller: > 5 kOhms)
Current	4(0)...20 mA / 20...4(0) mA (min/max. load: 0/500 Ohms)
Overvoltage protection	up to 36 VDC
Accuracy	
Position measurement:	
- Null/Span adjustment	100 % of electrical stroke (min. range 25 mm)
- Resolution	16 bit; 0,0015 % (Minimum 1 µm)
- Linearity	< ± 0,01 % F.S. (Minimum ± 50 µm)
- Repeatability	< ± 0,001 % F.S. (Minimum ± 1 µm)
- Hysteresis	< 4 µm
- Update time	0,5 ms up to 1200 mm / 1,0 ms up to 2400 mm / 2,0 ms up to 4800 mm / 5,0 ms up to 7600 mm stroke length
- Ripple	< 0,01 % F.S.
Speed measurement:	
- Range	0,025 - 10 m/s
- Deviation	< 0,5 %
- Resolution	0,1 mm/s Option 0,01 mm/s
- Update time (ms)	see position measurement
Temperature coefficient	< 30 ppm/°C
Operating conditions	
Magnet speed	any
Operating temperature	-40 °C ... +75 °C
Dew point, humidity	90% rel. humidity, no condensation
Protection	Profile: IP 65, Rod: IP 67, IP 68 for cable outlet, RS: IP69K
Shock test	100 g single hit, IEC-Standard 68-2-27
Vibration test	15 g / 10 - 2000 Hz, IEC-Standard 68-2-6
Standards, EMC test	Electromagnetic emission EN 61000-6-4, CISPR 16
	Electromagnetic immunity EN 61000-6-2
	EN 61000-4-2/3/4/6, Level 3/4, Criterium A, CE-qualified
Design, material	
Diagnostic display	LEDs beside connector
Profile model:	
Sensor head	Aluminum
Sensor stroke	Aluminum
Position magnet	Magnet slider or removable U-magnet
Rod model:	
Sensor head	Aluminum
Rod with flange	Stainless steel 1.4301 / AISI 304
Pressure rating	350 bar, 700 bar peak
Position magnet	Ring magnets, U-magnets
Installation	
Mounting position	any orientation
Profile	Movable mounting clamps fixed with M5 x 20 screws or T-slot nuts M5 in base channel
U-Magnet, removable	Mounting plate and screws from antimagnetical material
Rod	Threaded flange M18 x 1,5 or 3/4" -16 UNF-3A, Hex nut M18
Position magnet	Mounting plate and screws from antimagnetical material
Electrical connection	
Connection type	6 pin connector M16 or cable outlet
Input voltage	24 VDC (-15 / +20 %)
- Polarity protection	up to -30 VDC
- Overvoltage protection	up to 36 VDC
Current drain	100 mA typical
Ripple	< 1 % S-S
Electric strength	500 VDC (DC ground to machine ground)

Stable Profile Design

Temposonics®-RP offers modular construction, flexible mounting configurations and easy installation. Position measurement is contactless via two versions of permanent magnets.

• A sliding magnet running in profile housing rails. Connection with the mobile machine part is via a ball jointed arm to taking up axial forces.

• A floating magnet, mounted directly on the moving machine part, travels over the profile at a low distance. Its air-gap allows the correction of small misalignments at installation.

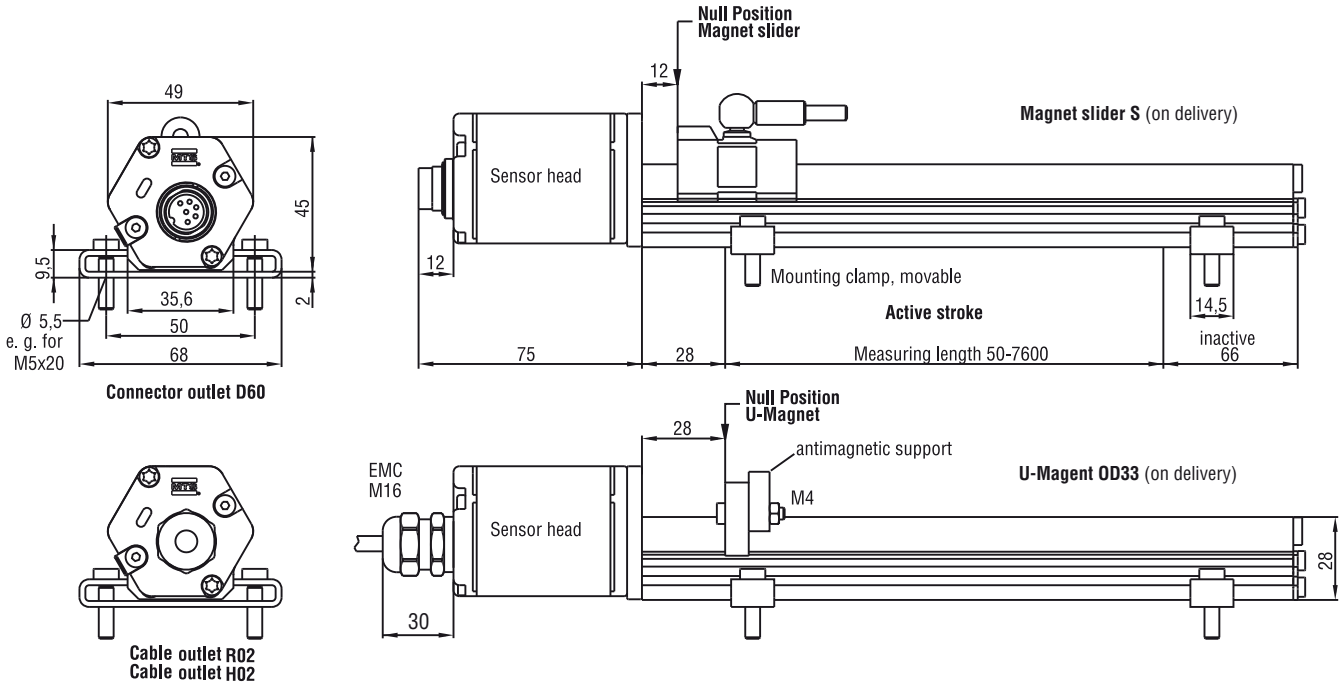

Wiring	Pin	Cable	Function
 Male insert sensor plug rear of cable connector	1	grey	**Output 1:** Position # 1 0...10 / 10...0 / -10...+10 / +10...-10 V 4(0)...20 / 20...4(0) mA
	2	pink	DC Ground
	3	yellow	**Output 2:** Position # 2 or Speed 0...10 / 10...0 / -10...+10 / +10...-10 V 4...20 / 20...4 mA
	4	green	DC Ground
	5	brown	+ 24 VDC (-15/+20 %)
	6	white	DC Ground (0 V)

All dimensions in mm

Standard position magnet upon delivery (see chapter Accessories)

Position magnets
Magnet slider S (Part No. 252 182)
Magnet slider V (Part No. 252 184)
U-Magnet OD33 (Part No. 251 416-2)

Connection types
6 pin female connector (Part No. 370 623)
6 pin female connector M16, 90° (Part No. 560 778)

High Pressure Rod Design

Temposonics®-RH with a pressureresistant stainless steel flange and sensing rod is suitable for use in hydraulic cylinders and externally in all applications where space is a problem. Position measurement is via ring or U-magnets travelling along the sensing rod without any mechanical contact.

Advantage…

the completely operable sensor cartridge can be replaced for servicing easily without opening the fluid circuit.

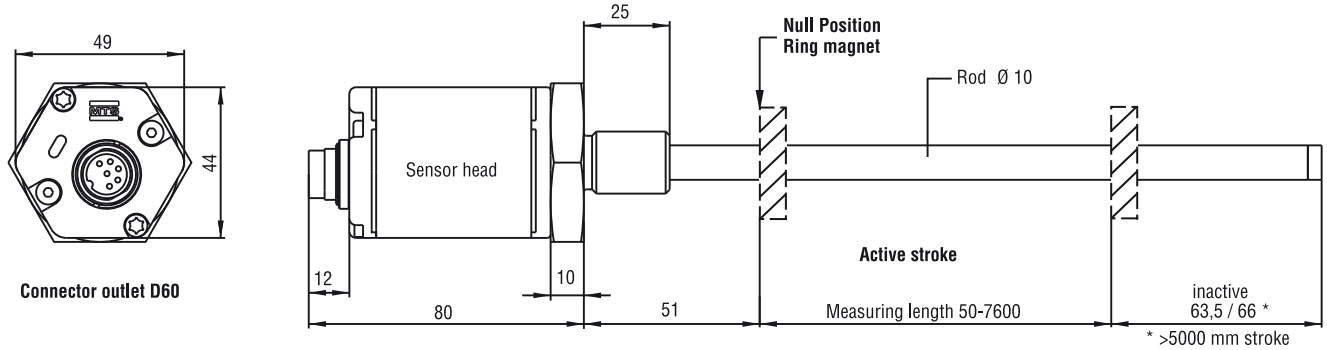

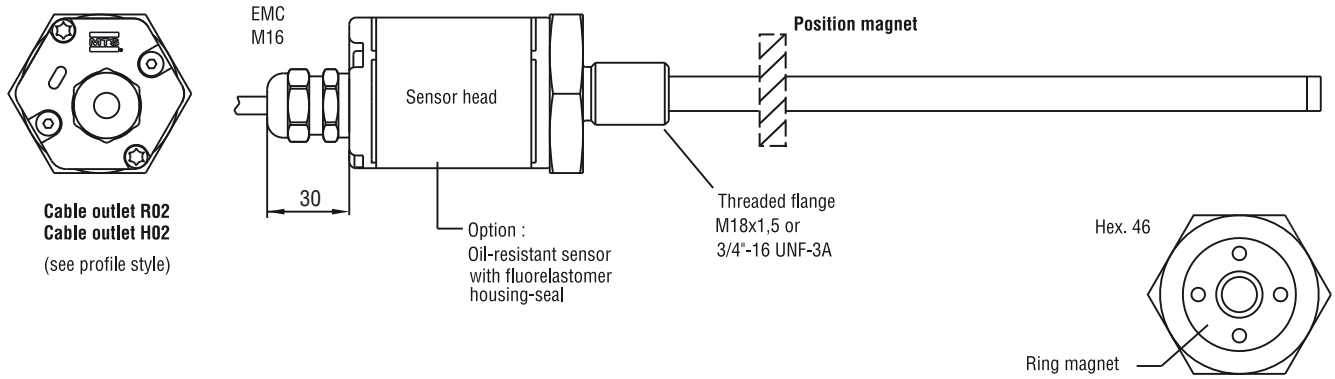

= **Magnets must be ordered separately (details see chapter Accessories)**

Standard Position Magnets (not on delivery, please order seperatly)

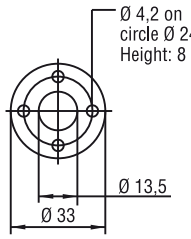

Ring magnet OD33
Part No. 201 542-2

Composite PA-Ferrite-GF20
Weigth ca. 14 g
Operating temperature:
-40 ... +100°C
Surface pressure max. 40 N/mm²
Fastening Torque for M4 screws max. 1 Nm

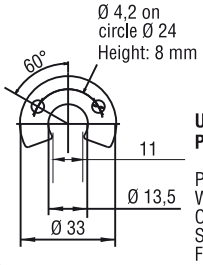

U-Magnet OD33
Part No. 251 416-2

PA-Ferrit-GF20
Weigth ca. 11 g
Operating temperature: -40 ... +100°C
Surface pressure max. 40 N/mm²
Fastening torque for M4 screws max. 1 Nm

All dimensions in mm

Standard position magnet not on delivery (see chapter Accessories)

Position magnets
Ring magnet OD33 (Part No. 201 542-2)
Ring magnet OD25,4 (Part No. 400 533)
U-Magnet OD33 (Part No. 251 416-2)

Connection types
6 pin female connector (Part No. 370 623)
6 pin female connector M16, 90° (Part No. 560 778)

Temposonics® M

3 / 7 digits

Sensor model
RP - Profile
RH - Hydraulic rod

Design
Profile Temposonics®-RP:
S - Magnet slider, joint at top
V - Magnet slider, joint at front
M - U-magnet, OD33
Rod Temposonics®-RH:
M - Flange M18 x 1,5 (Standard)
V - Flange M18 x 1,5 (Fluorelastomer housing-seal)
D - Flange M18 x 1,5 with bushing on rod end
R - Flange M18 x 1,5 with thread M4 at rod end
J - Flange M22 x 1,5, rod Ø 12,7 mm, 800 bar
S - Flage 3/4" - 16 UNF - 3A

Measuring length
Profile - 0050...5000 mm
Rod - 0050...7600 mm
Standard: See chart
Other length upon request.

Connection type
D60 - 6 pin male receptacle M16
R02 - 2 m PVC cable w/o connector, Option: R01-R10 (1-10 m)
H02 - 2 m PUR cable w/o connector, Option: H01-H10 (1-10 m)

Input voltage
1 - +24 VDC
A - +24 VDC, high vibration resistant (measuring length 25 … 2000 mm)

Output

1 Output with 1 Magnet

Output 1 (Position Magnet 1)

V01 = 0...10 V	**A01** = 4...20 mA
V11 = 10...0 V	**A11** = 20...4 mA
V21 = -10...+10 V	**A21** = 0...20 mA
V31 = +10...-10 V	**A31** = 20...0 mA

2 Outputs with 2 Magnets

Output 1 (Position Magnet 1)	+ Output 2 (Position Magnet 2)
V02 = 0...10 V	0 .. 10 V
V12 = 10...0 V	10...0 V
V22 = -10...+10 V	-10...+10 V
V32 = +10...-10 V	+10...-10 V
A02 = 4...20 mA	4...20 mA
A12 = 20...4 mA	20...4 mA

2 Outputs with 1 Magnet

Output 1 (Position Magnet 1) + Output 2 (Absolute Speed Magnet 1)

Magnet direction >>>>>	Head Null Tip
V01 xxx.x = 0...10 V	+10.....0.....+10 V
V11 xxx.x = 10...0 V	+10.....0.....+10 V
A01 xxx.x = 4...20 mA	20.....4..... 20 mA
A11 xxx.x = 20...4 mA	20.....4..... 20 mA

Output 1 (Position Magnet 1) + Output 2 (Speed Magnet 1)

Magnet direction >>>>>	Head Null Tip
V61 xxx.x = 0...10 V	-10.....0.....+10 V
V71 xxx.x = 10...0 V	+10.....0.....-10 V
A41 xxx.x = 4...20 mA	4.....12..... 20 mA

Output 1 (Position Magnet 1) + Output 2 (Position Magnet 1)
V03 = 0...10 V 10 ... 0 V

Output 1 (Position Magnet 1) + Output 2 (electronics temperature)
A04 = 4...20 mA 4...20 mA (-40ºC...+100ºC)

On delivery profile model:
Sensor, Position magnet, 2 mounting clamps up to 1250 mm + 1 clamp for every additional 500 mm

On delivery rod model:
Sensor and O-Ring.
Magnets must be ordered separately.

Stroke Length Standard RP	
Stroke Length	**Ordering Steps**
≤ 500 mm	25 mm
500 - 2500 mm	50 mm
2500 - 5000 mm	100 mm
> 5000 mm	250 mm

Stroke Length Standard RH	
Stroke Length	**Ordering Steps**
< 500 mm	5 mm
500 - 750 mm	10 mm
750 - 1000 mm	25 mm
1000-2500 mm	50 mm
2500 - 5000 mm	100 mm
> 5000 mm	250 mm

Fill in blanks (xxx.x) with desired max. speed (see above):
- Speed range 1: 0,1…10 m/s (0001 … 0100)
Sample: (-5,5...0...5,5 m/s = 10...0...10 V) = V01 0055
- Speed range 2: 25…90 mm/s (1025 … 1090)
Sample: (-50...0...50 mm/s = 4...12...20 mA) = A41 1050

Accessories page 57 and following.

Temposonics®

Absolute, Non-Contact Position Sensors

R-Series
CANopen • CANbasic

Temposonics® RP and RH
Measuring length 25 - 7600 mm

More than just a sensor
Multi-Position Measurement

- Rugged Industrial Sensor
- Linear and Absolute Measurement
- LEDs for Sensor Diagnostic
- Non-contact Sensing with Highest Durability
- Superior Accuracy: Resolution up to 2 µm
- Linearity better 0,01 % F.S.
- Repeatability 0,001 % F.S.
- Sensor-based intelligence
- Direct CAN Output, Displacement + Speed
- Multi-Position Measurement (1 Sensor for 20 Positions)
- Selectable Bus Termination (CANopen)
- CANopen with Heartbeat-Function

Sensor Diagnostic Display

Integrated LEDs (green/red) provide basic visual feedback for normal sensor operation and troubleshooting.

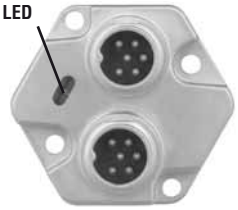

Green	Red	Description
ON	OFF	Normal function
ON	ON	Magnet not detected or wrong quantity of magnets
OFF	ON	Initialization error
Flashing	Flashing	Power out of range (high or low)

CAN Bus Interface

Temposonics® position sensors fulfill - as slave devices - all requirements of the CAN-Bus (ISO 11898). The sensors electronics convert the displacement measurements into bus oriented outputs and transfer these data directly to the control unit. The bus interface is appropriate for serial data transfer of 1 Mbit/s maximum. Sensor integrated software supports the Bus profiles **CANopen**, **CANbasic** and **DeviceNet** for a comprehensive customized configuration of the sensor-bus system.

Operation modes

CAN sensors provide following measurings with **one** or **multiple** magnets:

1. Standard measurement:

- **CANbasic:** Displacement + speed with 1 magnet
- **CANopen:** Displacement + speed with 1 - 4 magnets and electronic temperature

2. Multi-Magnet measurement:

- **CANbasic:** Positions for each of 2-20 magnets *simultaneously*

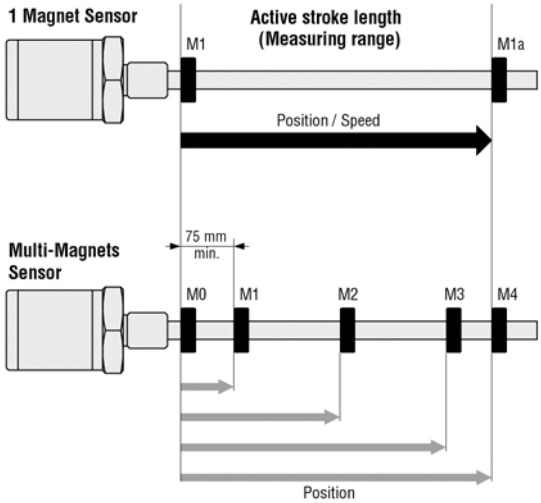

Temposonics® CANbus Variations

1. CANopen

is corresponding to encoder profile DS-406 V3.1 (CiA Standard DS-301 V4.02). CANopen functionality describes communication objects (below), which are set via configuration tool.

- **Service Data Object (SDO)** main usage is the sensor configuration. Selectable parameters: Resolution for position + speed, 4 set-points, Preset of operation range and null position for 4 magnets.
- **Process Data Object (PDO)** is used for real-time data transfer of sensor measurements in max. 8 bytes data blocks. The sensor uses PDOs for information about position, speed, limit status, cam-control and operation range of 4 magnets. Data formats: Positions = 32-bit and speed = 16-bit integer value. Limit value = 8-bit.
- **PDO Transmission Type:** Asynchronous (cycle time of 1 to 65'535 ms) or synchronous.
- **Synchronisation Object (SYNC)**
- **Emergency Object**
- **Nodeguard Object**
- **Heartbeat Function**
- **Selectable bus termination**
- **Electronics temperature can be controlled via CANbus**
- **CANopen Configuration Tool** is a software (CD-Rom) and is used as an Electronic Data Sheet (EDS) for sensor configuration. Each sensor will be delivered with an operating manual and an EDS.

2. CANbasic (MTS)

permits a simple, flexible adaption to customized profiles with a short bus access. Here, no configuration tool is needed because parameters are factory set. CANbasic protocol complies with CAN 2.0A standard and always includes the following applications data for 1-Magnet measurement: Position, Speed, Sensor Status and 5 Setpoints.

3. CANbasic Multi-Magnet Measurement

provides the position measurement with **maximum 20 magnets on one sensor.** Set-ups and operation are via the on-site control system according to MTS instruction manual.

Data protocols of above CAN options are factory set in the sensor processor, so all versions can be connected directly to the fieldbus.

Conformance Test Certificate No. CiA199902-301V30/I-004 is given by the CANbus user organisation CiA (CAN in Automation) for MTS CANopen sensors.

Accessory: MTS Servicetool

CANopen Address Programmer is used for setup the Node-Address to sensors with CANopen interface. This setup normally is done by the **LMT/LSS-Service** of the bus. Since some master systems do not support this standard, or customer controller system can not handle, this tool - connected to the sensor - can be used for direct setup.

Technical Data

Input	
Measured variables	Displacement, speed / Option: Multi-Magnet measurement (max. 20 positions simultaneous)
Measuring range	Profile 25 - 5000 mm / Rod 25 - 7600 mm
Output	
Interface	CAN-Fieldbus System ISO-DIS 11898
Data protocol	CANopen: CIA Standard DS 301 V3.0 / Encoder Profile DS 406 V3.1, CANbasic: CAN 2.0 A
Baud rate, kBit/s	1000 800 500 250 125 50 20
Cable length, m	< 25 < 50 < 100 < 250 < 500 < 1000 < 2500
	The sensor will be supplied with ordered baud rate, which is changeable by customer
Overvoltage protection	up to 36 VDC
Accuracy	
Resolution	CANopen CANbasic
- Displacement	5 µm 2 µm 5 µm 2 µm
- Speed	0,5 mm/s 0,2 mm/s 1,0 mm/s 0,1 mm/s
Update time	1,0 ms up to 2400 / 2,0 ms up to 4800 / 4,0 ms up to 7600 mm stroke length
	0,5 ms up to 1200 mm extra for CANbasic
Linearity	< ± 0,01 % F.S. (Minimum ± 40 µm)
	Option internal linearisation
	Linearity tolerance:
	RP/RH < 300 mm: typ. ± 15 µm, max. ± 25 µm, > 300 ... 600 mm: typ. ± 20 µm, max. ± 30 µm
	> 600 ... 1200 mm: typ. ± 30 µm, max. ± 50 µm
	RP 1200 ... 3000 mm: typ. ± 45 µm, max. ± 90 µm, 3 ... 5 m: typ. ± 85 µm, max. ± 150 µm
Repeatability	< ± 0,001 % F.S. (Minimum ± 2,5 µm)
Temperature coefficient	< 15 ppm/°C
Hysteresis	< 4 µm
Operating conditions	
Magnet speed	Any
Operating temperature	-40 °C ... +75 °C
Dew point, humidity	90% rel. humidity, no condensation
Protection	Profile style: IP65 / Rod style: IP67, IP68 for cable outlet, RS: IP69K
Shock test	100 g, single hit, IEC-Standard 68-2-27
Vibration test	15 g / 10 - 2000 Hz, IEC-Standard 68-2-6
Standards, EMC test	Electromagnetic emission EN 61000-6-4, CISPR 16
	Electromagnetic immunity EN 61000-6-2
	EN 61000-4-2/3/4/6, Level 3/4, Criterium A, CE-qualified
Design, material	
Diagnostic display	LEDs beside connector
Profile model:	
Sensor head	Aluminum
Sensor stroke	Aluminum
Position magnet	Magnet slider or removable U-magnet
Rod model:	
Sensor head	Aluminum
Rod with flange	Stainless steel 1.4301 / AISI 304
Pressure rating	350 bar, 700 bar peak
Position magnet	Ring magnets, U-magnets
Installation	
Mounting position	Any orientation
Profile	Movable mounting clamps or T-slot nuts M5 in base channel
U-Magnet, removable	Mounting plate and screws from antimagnetical material
Rod	Threaded flange M18 x 1,5 or 3/4" -16 UNF-3A, Hex nut M18
Position magnet	Mounting plate and screws from antimagnetical material
Electrical connection	
Connection type	Single or dual 6 pin connectors M16 or cable outlet or 2 x 5 pin connector M12 + 4 pin connector M8
Input voltage	24 VDC (-15 / +20 %)
- Polarity protection	up to -30 VDC
- Overvoltage protection	up to 36 VDC
Current drain	90 mA typical
Ripple	< 1 % S-S
Electric strength	500 VDC (DC ground to machine ground)

Stable Profile Design

Temposonics®-RP offers modular construction, flexible mounting configurations and easy installation. Position measurement is contactless via two versions of permanent magnets.

• A sliding magnet running in profile housing rails. Connection with the mobile machine part is via a ball jointed arm to taking up axial forces.

• A floating magnet, mounted directly on the moving machine part, travels over the profile at a low distance. Its air-gap allows the correction of small misalignments at installation.

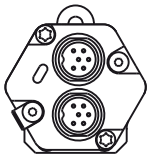

Connector outlet D62

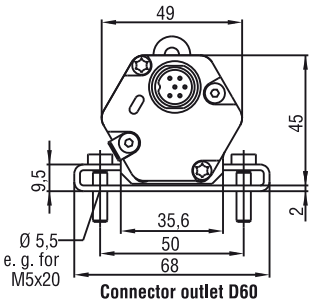

Connector outlet D60

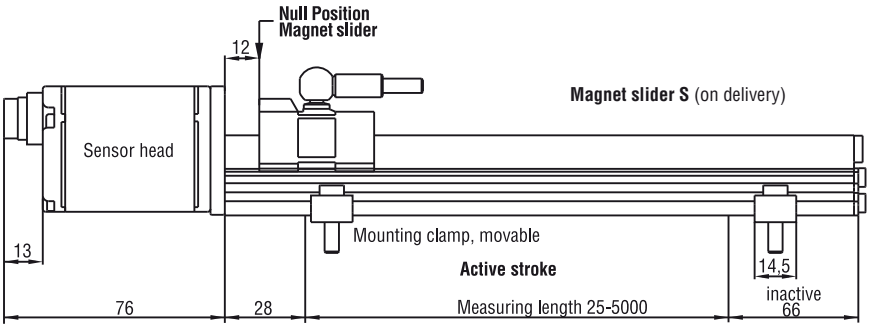

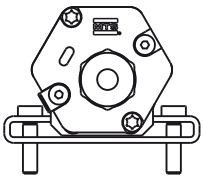

Cable outlet DP02

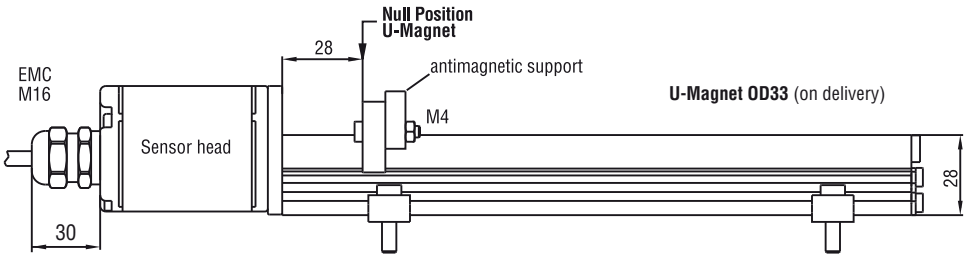

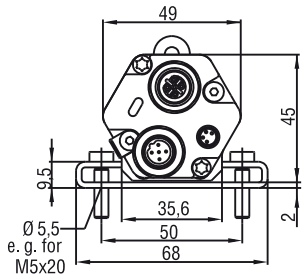

Connector outlet D54

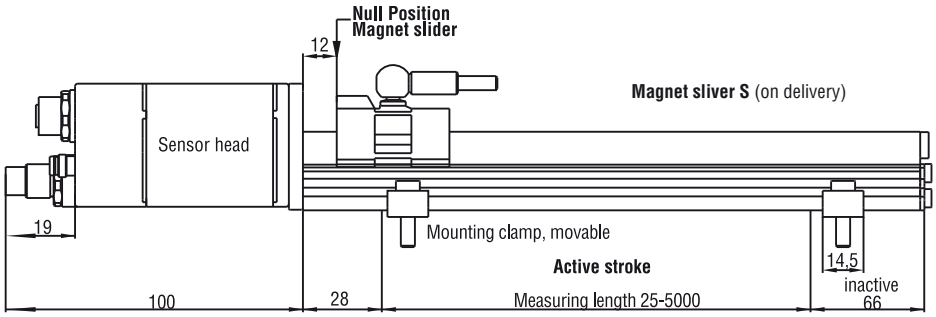

Connector outlet D60/D62

Wiring	Pin	Cable	Function
	1	grey	CAN (-)
	2	pink	CAN (+)
	3	do not connect	---
	4	do not connect	---
	5	brown	+24 VDC (-15/+20%)
Male insert sensor plug rear of cable connector	6	white	0 V

Connector outlet D54

Wiring	Pin	Function
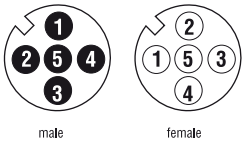	1	shield
	2	do not connect
	3	do not connect
	4	CAN (+)
	5	CAN (-)

male female

View:
Front of sensor connector
Back of mating connector

Input voltage	Pin	Cable	Function
	1	brown	+24 VDC (-15/+20 %)
	2	white	do not connect
	3	blue	0 V (GND)
	4	black	
Male insert sensor plug rear of cable connector			

All dimensions in mm

Standard position magnet upon delivery (see chapter Accessories)

Position magnets
Magnet slider S (Part No. 252 182)
Magnet slider V (Part No. 252 184)
U-Magnet OD33 (Part No. 251 416-2)

Connection types
6 pin female connector (Part No. 370 623)
6 pin female connector M16, 90° (Part No. 560 778)

High Pressure Rod Design

Temposonics®-RH with a pressureresistant stainless steel flange and sensing rod is suitable for use in hydraulic cylinders and externally in all applications where space is a problem. Position measurement is via ring or U-magnets travelling along the sensing rod without any mechanical contact.

Advantage…

the completely operable sensor cartridge can be replaced for servicing easily without opening the fluid circuit.

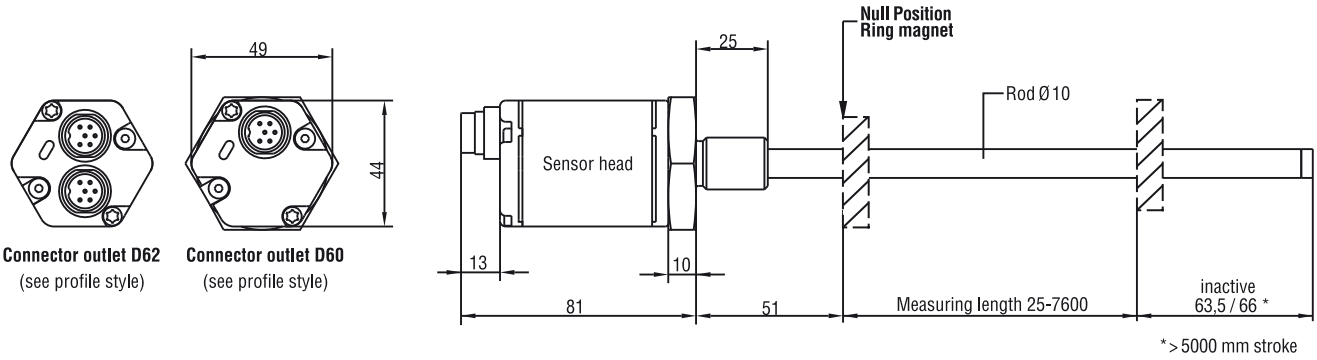

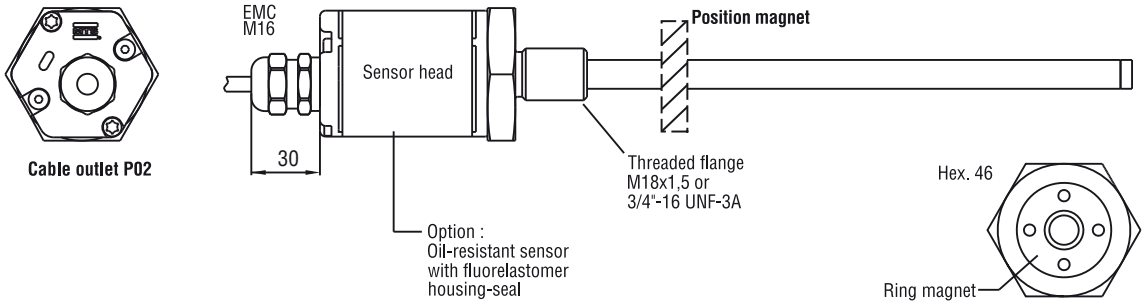

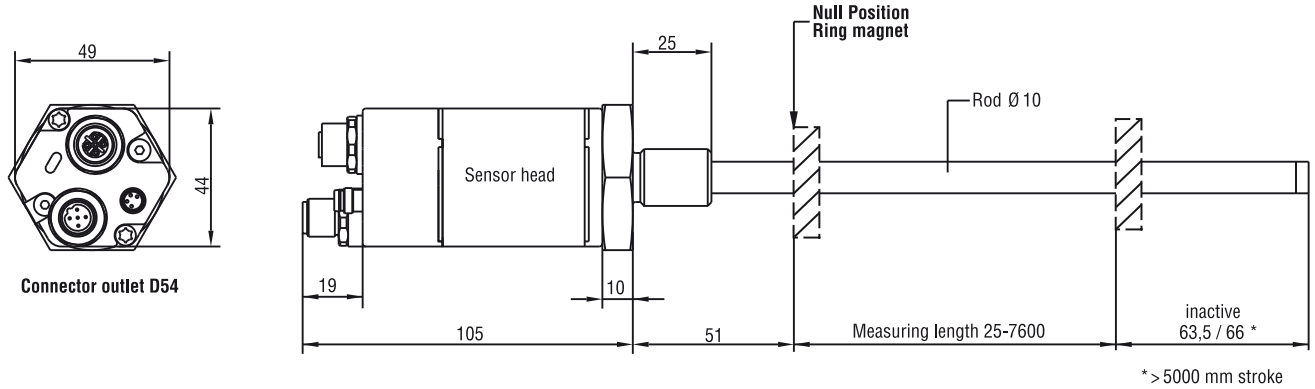

= Magnets must be ordered separately (details see chapter Accessories)

Standard Position Magnets (not on delivery, please order seperatly)

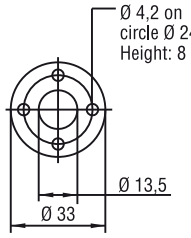

Ring magnet OD33
Part No. 201 542-2

Composite PA-Ferrite-GF20
Weigth ca. 14 g
Operating temperature:
-40 ... +100°C
Surface pressure max. 40 N/mm²
Fastening Torque for M4 screws max. 1 Nm

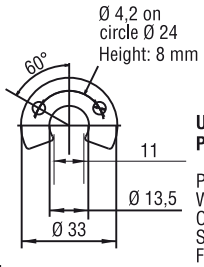

U-Magnet OD33
Part No. 251 416-2

PA-Ferrit-GF20
Weigth ca. 11 g
Operating temperature: -40 ... +100°C
Surface pressure max. 40 N/mm²
Fastening torque for M4 screws max. 1 Nm

All dimensions in mm

Standard position magnet not on delivery (see chapter Accessories)

Position magnets
Ring magnet OD33 (Part No. 201 542-2)
Ring magnet OD25,4 (Part No. 400 533)
U-Magnet OD33 (Part No. 251 416-2)

Connection types
6 pin female connector (Part No. 370 623)
6 pin female connector M16, 90° (Part No. 560 778)

Temposonics® M C Z

Sensor model
RP - Profile
RH - Rod

Design
Profile Temposonics®-RP:
S - Magnet slider, joint to top
V - Magnet slider, joint at front
G - Magnet slider, join at top, blackslash free
M - U-Magnet, OD33
Rod Temposonics®-RH:
M - Flange M18 x 1,5 (Standard)
V - Flange M18 x 1,5
(Fluorelastomer housing-seal)
D - Flange M18 x 1,5 with bushing on rod end
R - Flange M18 x 1,5 with thread M4 at rod end
J - Flange M22 x 1,5, rod Ø 12,7 mm, 800 bar
S - Flange 3/4" - 16 UNF - 3A

Measuring length
Profile - 0025...5000 mm
Rod - 0025...7600 mm
Standard: See chart
Other length upon request.

Connection type
D60 - 6 pin male receptacle M16
D62 - 2 x 6 pin male receptacle M16
D54 - 2 x 5 pin male/female receptacle M12, 4 pin male receptacle M8
P02 - 2 m PUR cable w/o connector, Option: P01-P10 (1-10 m)

Input voltage
1 - +24 VDC
A - +24 VDC, high vibration resistant (measuring length 25 … 2000 mm)

Output
C [1][2][3][4][5][6] = CAN-Bus

[1][2][3] Protocol:	**101** = CANbasic (MTS) • **207** = Multi-Position measurement • **304** = CANopen • **504** = CANopen internal linearization
[4] Baud rate:	**1** = 1000 kBit/s • **2** = 500 kBit/s • **3** = 250 kBit/s • **4** = 125 kBit/s
[5] Resolution:	**1** = 5 µm • **2** = 2 µm
[6] Type:	**1** = Standard

Magnet number for Multi-Position measurement*
Z02 - Z20 = 2 - 20 pcs.
**Note: Please specify magnet numbers for your sensing application and order separately*

On delivery Profile model:
Sensor, Position magnet, 2 mounting clamps up to 1250 mm + 1 clamp for every additional 500 mm.

On delivery Rod model:
Sensor and O-Ring. Magnets must be ordered separately. Use signed magnets for sensors w/LCO

CANopen only:
Installation guide + CD-ROM (Electronic Data Sheet)

Stroke Length Standard RP	
Stroke Length	**Ordering Steps**
≤ 500 mm	25 mm
500 - 2500 mm	50 mm
2500 - 5000 mm	100 mm
> 5000 mm	250 mm

Stroke Length Standard RH	
Stroke Length	**Ordering Steps**
< 500 mm	5 mm
500 - 750 mm	10 mm
750 - 1000 mm	25 mm
1000-2500 mm	50 mm
2500 - 5000 mm	100 mm
> 5000 mm	250 mm

Accessories page 57 and following.

Temposonics®

Absolute, Non-Contact Position Sensors

R-Series
EtherCAT®

Temposonics®-RP and RH
Measuring length 25 - 7600 mm

Advanced Communication
... offers Multi-Position Measurement

- **Rugged Industrial Sensor**
- **Linear and Absolute Measurement**
- **LEDs for Sensor Diagnostics**
- **Non-contact Sensing with Highest Durability**
- **Superior Accuracy: Linearity better 0,01 % F. S.**
- **Resolution 1 µm**
- **Repeatability 0,001 % F.S.**
- **Direct EtherCAT Output**
- **Displacement + Velocity with 5 Magnets**
- **Displacement with up to 20 Magnets**

Sensor Diagnostic display

Integrated LEDs (green/red) provide basic visual feedback for normal sensor operation and troubleshooting.

Green	Red	Description
Flashing	OFF	Normal function
Flashing	ON	Magnet not detected or Wrong quantity of magnets

Further diagnostic features programmable.

Operation Mode

There are two versions available:

E101 1-5 magnet measurement

Measuring in parallel the position and velocities of up to 5 magnets.

The data telegram contains from each magnet:

- Position (32 bit)
- Velocity (32 bit)
- Long status information (16 bit)

E102 1-20 multi-magnet measurement

Measuring in parallel the positions of up to 20 magnets.

The data telegram contains from each magnet:

- Position (32 bit)
- Velocity (32 bit)
- Long status information (16 bit)

Characteristics of the EtherCAT® sensor

Sensor's output

- Position as an absolute value
- Velocity and direction of the drive
- Diagnostics (Status information)

The EtherCAT® Interface

The sensor fulfils the requirements of the EtherCAT field-bus and can be connected as a slave to this bus system. EtherCAT is an open field-bus system which is based on the EtherNet technology (IEEE 802.3) with a high data rate, short response time and a good real-time performance, it is standardized in the IEC/PAS 62407 and it is part of the ISO 15745-4. The integration in the IEC 61158, IEC 61784 and IEC 61800-7 is in the way.

It is very easy to implement the Temposonics® sensor with the EtherCAT interface into an EtherCAT field-bus system. The System-Manager (e. g. TwinCAT from Beckoff) gets all the parameters of the sensor from the XML-file, which part of the delivery. There are no settings on the sensor.

The measurement can be synchronized by the PLC, by switching the sensor to the "distributed clock mode" (1 to 5 magnets only).

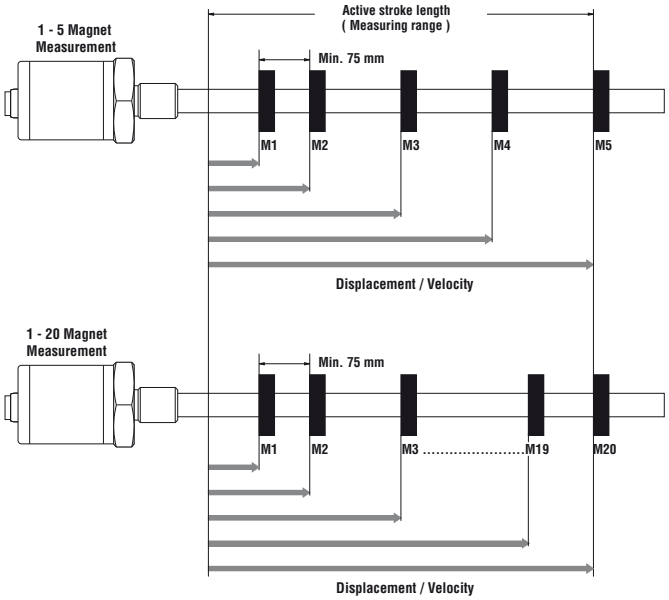

Technical Data

Input	
Measured variable	Displacement / Velocity 1-5 magnet measurement option 1-20 magnet measurement
Measuring length	Profile 25 - 5000 mm / Rod 25 - 7600 mm
Output	
Output signal	EtherCAT Ethernet Control Automation Technology
Data format	EtherCAT 100 Base-Tx, fast Ethernet
Data transmission rate	100 MBit/s max.
Accuracy	
Resolution	
- Displacement	1 ... 1000 µm selectable
- Speed	1 µm/s (Quality rating) adjustable according to velocity and measuring length
Linearity	< ± 0,01 % F.S. (Minimum ± 50 µm)
	Option internal linearisation
	Linearity tolerance:
	RP/RH < 300 mm: typ. ± 15 µm, max. ± 25 µm, > 300 ... 600 mm: typ. ± 20 µm, max. ± 30 µm
	> 600 ... 1200 mm: typ. ± 30 µm, max. ± 50 µm
	RP 1200 ... 3000 mm: typ. ± 45 µm, max. ± 90 µm, 3 ... 5 m: typ. ± 85 µm, max. ± 150 µm
Repeatability	< ± 0,001 % F.S. (Minimum ± 2,5 µm)
Cycle time	Measuring length dependent
Data transmission rate	≤ 10 KHz (Oversampling is active while the scanning cycle is shorter than the measuring cycle.)
Temperature coefficient	< 15 ppm/°C
Ripple	< 5 µm
Hysteresis	< 4 µm
Operating conditions	
Magnet speed	any
Operating temperature	-40 °C ... +75 °C
Dew point, humidity	90 % rel. humidity, no condensation
Protection	Profile: IP65, Rod: IP67, if mating connector is correctly fitted, RS: IP69K
Shock test	100 g single hit, IEC-Standard 68-2-27
Vibration test	15 g / 10 - 2000 Hz, IEC-Standard 68-2-6
Standards, EMC test	Electromagnetic emission EN 61000-6-4, CISPR 16
	Electromagnetic immunity EN 61000-6-2
	EN 61000-4-2/3/4/6, Level 3/4, Criterium A, CE-qualified
Design, Material	
Diagnostic display	LEDs beside connector
Profile model:	
Sensor head	Aluminum
Sensor stroke	Aluminum
Position magnet	Magnet slider or removable U-magnet
Rod model:	
Sensor head	Aluminum
Rod with flange	Stainless steel 1.4301 / AISI 304
Pressure rating	350 bar, 700 bar peak
Position magnet	Ring magnets, U-magnets
Installation	
Mounting position	any orientation
Profile	Movable mounting clamps or T-slot nuts M5 in base channel
U-Magnet, removable	Mounting plate and screws from antimagnetical material
Rod	Threaded flange M18 x 1,5 or 3/4" -16 UNF-3A, Hex nut M18
Position magnet	Mounting plate and screws from antimagnetical material
Electrical connection	
Connection type	2 x 4 pin connector M12-D
Input voltage	24 VDC (-15 / +20 %)
- Polarity protection	up to -30 VDC
- Overvoltage protection	up to 36 VDC
Current drain	80 mA typical
Ripple	< 1 % S-S
Electric strength	500 VDC (DC ground to machine ground)

Stable Profile Design

Temposonics®-RP offers modular construction, flexible mounting configurations and easy installation. Position measurement is contactless via two versions of permanent magnets.

• A sliding magnet running in profile housing rails. Connection with the mobile machine part is via a ball jointed arm to taking up axial forces.

• A floating magnet, mounted directly on the moving machine part, travels over the profile at a low distance. Its air-gap allows the correction of small misalignments at installation.

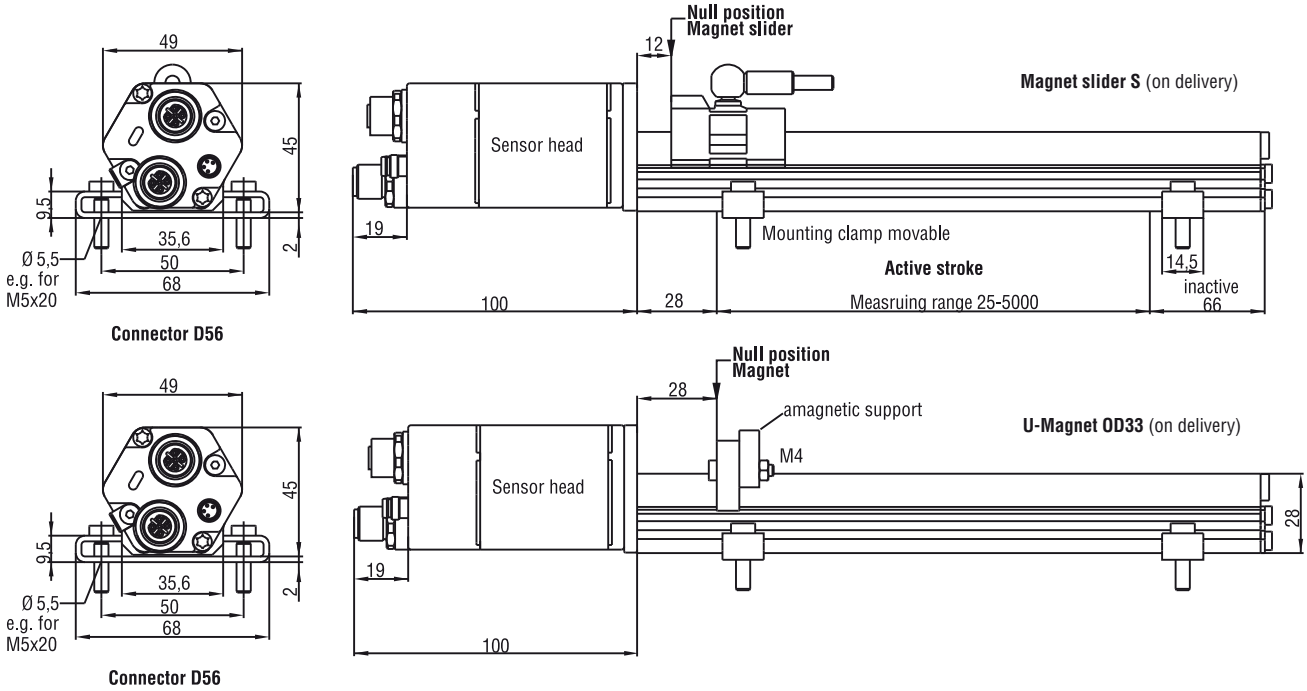

Connection

View
Connector side
Sensor

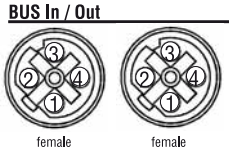

BUS In / Out	Pin	Cable	Function
	1	yellow	Tx+
	2	white	Rx+
	3	orange	Tx-
	4	blue	Rx-

Input voltage	Pin	Cable	Function
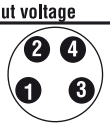	1	brown	+24 VDC (-15/+20%)
	2	white	do not connect
	3	blue	0 V (GND)
	4	black	do not connect

All dimensions in mm

Standard position magnet upon delivery (see chapter Accessories)

Position magnets
Magnet slider S (Part No. 252 182)
Magnet slider V (Part No. 252 184)
U-Magnet OD33 (Part No. 251 416-2)

Connection types
Cable connector (Part No. 530 066)
Cable connector (Part No. 530 064)
4 pin Bus cable connector (Part No. 370 523)

High Pressure Rod Design

Temposonics®-RH with a pressureresistant stainless steel flange and sensing rod is suitable for use in hydraulic cylinders and externally in all applications where space is a problem. Position measurement is via ring or U-magnets travelling along the sensing rod without any mechanical contact.

Advantage…

the completely operable sensor cartridge can be replaced for servicing easily without opening the fluid circuit.

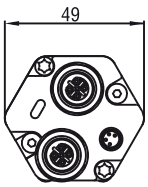

Connector D56

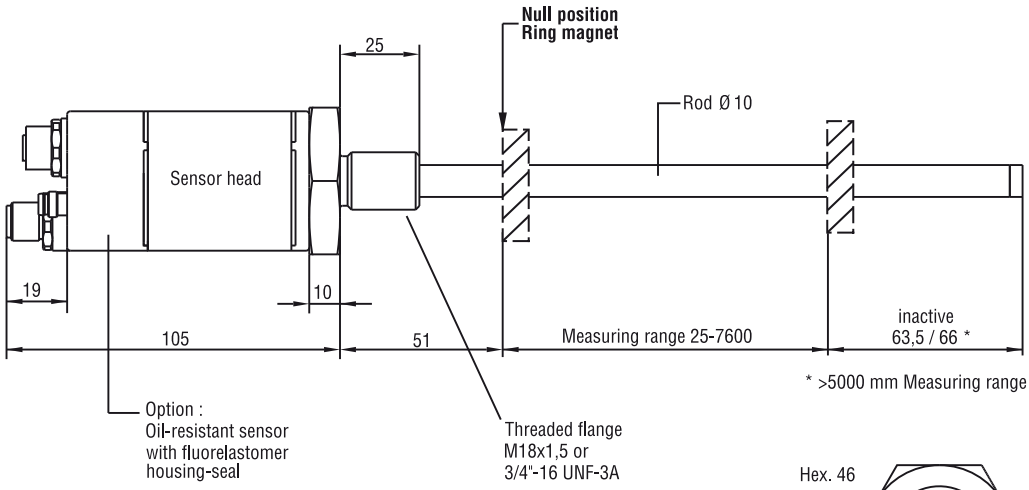

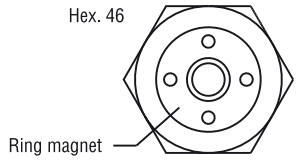

= Magnets must be ordered separately (details see chapter Accessories)

Standard Position Magnets (not on delivery, please order seperatly)

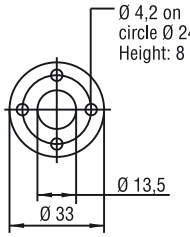

Ring magnet OD33
Part No. 201 542-2

Composite PA-Ferrite-GF20
Weigth ca. 14 g
Operating temperature:
-40 ... +100°C
Surface pressure max. 40 N/mm²
Fastening Torque for M4 screws max. 1 Nm

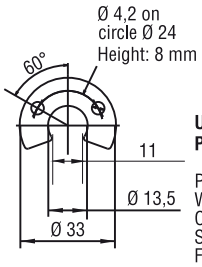

U-Magnet OD33
Part No. 251 416-2

PA-Ferrit-GF20
Weigth ca. 11 g
Operating temperature: -40 ... +100°C
Surface pressure max. 40 N/mm²
Fastening torque for M4 screws max. 1 Nm

All dimensions in mm

Standard position magnet not on delivery (see chapter Accessories)

Position magnets
Ring magnet OD33 (Part No. 201 542-2)
Ring magnet OD25,4 (Part No. 400 533)
U-Magnet OD33 (Part No. 251 416-2)

Connection types
Cable connector (Part No. 530 066)
Cable connector (Part No. 530 064)
4 pin Bus cable connector (Part No. 370 523)

Temposonics® M E Z

Sensor model
RP - Profile
RH - Rod

Design
Profile Temposonics®-RP:
S - Magnet slider, joint at top
V - Magnet slider, joint at front
G - Magnet slider, join at top, blackslash free
M - U-Magnet, OD33
Rod Temposonics®-RH:
M - Flange M18 x 1,5 (Standard)
V - Flange M18 x 1,5
(Fluorelastomer housing-seal)
D - Flange M18 x 1,5 with bushing on rod end
R - Flange M18 x 1,5 with thread M4 at rod end
J - Flange M22 x 1,5, rod Ø 12,7 mm, 800 bar
S - Flange 3/4" - 16 UNF - 3A

Measuring length
Profile - 0025...5000 mm
Rod - 0025...7600 mm
Standard: See chart
Other length upon request.

Connection type
D56 - 2 x 4 pin female receptacle M12-D, 1 x 4 pin male receptacle M8

Input voltage
1 - + 24 VDC
A - +24 VDC, high vibration resistant (measuring length 25 … 2000 mm)

Output
E 101 - EtherCAT, Single- and Multi-Position measurement, 1-5 positions and velocity distributed clock mode selectable
E 102 - EtherCAT, Single- and Multi-Position measurment, 1-20 positions and velocity
E 103 - EtherCAT, Single-Position maesuremnt, position and velocity, internal linearization

Magnet number for Multi-Position measurement*
Z02 - Z20 = 2 - 20 pcs
**Note: Please specify magnet numbers for your sensing application and order separately*

On delivery Profile Model:
Sensor, magnet slider or U-magnet, 2 mounting clamps up to 1250 mm stroke + 1 clamp for every additional 500 mm.
Installation guide + CD-ROM (XML-File).

On delivery Rod Model:
Sensor and O-Ring. Installation guide + CD-ROM (XML-File).
Magnets must be ordered separately. Use signed magnets for sensors w/LCO

Stroke Length Standard RP	
Stroke Length	**Ordering Steps**
≤ 500 mm	25 mm
500 - 2500 mm	50 mm
2500 - 5000 mm	100 mm
> 5000 mm	250 mm

Stroke Length Standard RH	
Stroke Length	**Ordering Steps**
< 500 mm	5 mm
500 - 750 mm	10 mm
750 - 1000 mm	25 mm
1000-2500 mm	50 mm
2500 - 5000 mm	100 mm
> 5000 mm	250 mm

Accessories page 57 and following.

Temposonics®

Absolute, Non-Contact Position Sensors

R-Series
Profibus

Temposonics® RP and RH
Measuring length 25 - 7600 mm

Advanced Communication
... offers Multi-Position Measurement

- Rugged Industrial Sensor
- Linear and Absolute Measurement
- LEDs for Sensor Diagnostics
- Non-contact Sensing with Highest Durability
- Superior Accuracy: Linearity better 0,01 %
- Resolution up to 1 µm
- Repeatability 0,001 %
- Direct Profibus-DP Output, Displacement + Speed
- Multi-Position Measurement: 1 Sensor for max. 20 Positions

Sensor Diagnostic Display

Integrated LEDs (green/red) provide basic visual feedback for normal sensor operation and troubleshooting.

Green	Red	Description
ON	OFF	Normal function
ON	ON	Magnet not detected or Wrong quantity of magnets
Flashing	OFF	Waiting for Master parameters
Flashing	ON	Programming mode

Profibus Interface

Temposonics® sensors fulfill all requirements of PROFIBUS-DP (EN 50170). The sensor realizes the absolute position measuring with direct transmission of serial, bitsynchronous data in RS485 standard to control units in a baud rate of 12 Mbit/s maximum. PROFIBUS interface is built-up with
Siemens buscontroller SPC3. In addition to applications data transmission, PROFIBUS provides powerful functions for diagnostics and configuration, loaded into the bus via the GSD (Electronic Device Data Sheet).
Profibus sensors - corresponding DP-slave Class 2 - featuring

Sensor Outputs:

- Absolute position measurement
- Speed measurement
- Sensor status
- Error detection (e.g. magnet status)

Selectable Parameters:

- Offset/Preset for each magnet
- Measuring direction: Forward/reverse
- Resolution
- Different data formats

Operation Mode:

P101 1-20 Multi-Magnet measurement

Position measurement of max. 20 magnets simultaneously

P102 1 Magnet measurement (Standard)

Positions measurement 1 magnet

P103 1-5 Multi-Magnet measurement

Position and speed measurement of max. 5 magnets simultaneously

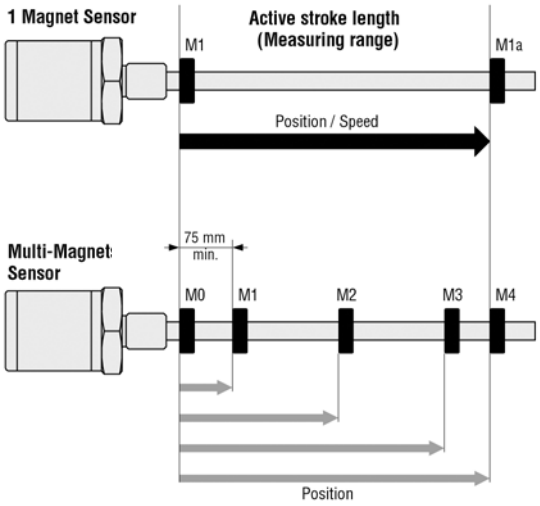

Data Exchange

With Multi-Magnet measurement, 1 status byte and 3 bytes of position data for each position are transmitted. The status byte contains e.g. the error bit and the position number of the following measurement value. Dependent on sensor parameters setting, the position data can be transfered to the control unit in different formats (e.g. INTEL or MOTOROLA format).

Accessory: MTS Servicetool

Profibus Address-Programmer is used for setup sensor's slave address. Normally addressing is done by Profibus **SetSlaveAddress.** Since some master systems do not support this standard, or customers controller can not handle, this tool - connected to the sensor - can be used for direct addressing.

Technical Data

Input	
Measured variable	Displacement / Option: Multi-Magnet measurement (max. 20 positions or 5 positions + 5 velocities)
Measuring length	Profile 25 - 5000 mm / Rod 25 - 7600 mm
Output	
Output signal	PROFIBUS-DP System according ISO 74498
Data format	PROFIBUS-DP (EN 50 170)
Data transmission rate	Max. 12 Mbit/s
Accuracy	
Resolution	
- Displacement	1 µm / other values selectable via GSD-File
- Speed	5 µm displacement resolution: 0,64 mm/s up to 500 mm; 0,43 mm/s up to 2000 mm; 0,21 mm/s up to 4500 mm; 0,14 mm/s up to 7600 mm stroke length
Linearity	< ± 0,01 % F.S. (Minimum ± 50 µm) Option internal linearisation Linearity tolerance: RP/RH < 300 mm: typ. ± 15 µm, max. ± 25 µm, > 300 ... 600 mm: typ. ± 20 µm, max. ± 30 µm > 600 ... 1200 mm: typ. ± 30 µm, max. ± 50 µm RP 1200 ... 3000 mm: typ. ± 45 µm, max. ± 90 µm, 3 ... 5 m: typ. ± 85 µm, max. ± 150 µm
Option Internal Linearization	Linearity ± 20 µm ... ± 70 µm = 100 mm ... 5000 mm ML
Repeatability	< ± 0,001 % F.S. (Minimum ± 2,5 µm)
Cycle time, standard (1 magnet)	0,5 ms at 500 mm / 1 ms at 2000 mm / 2 ms at 4500 mm / 3,1 ms at 7600 mm stroke length each additional magnet + 0,05 ms; for speed measurement ca. + 0,03 ms
Temperature coefficient	< 15 ppm/°C
Ripple	< 5 µm
Hysteresis	< 4 µm
Operating conditions	
Magnet speed	any
Operating temperature	-40 °C ... +75 °C
Dew point, humidity	90% rel. humidity, no condensation
Protection	Profile: IP65, Rod: IP67, if mating connector is correctly fitted, RS: IP69K
Shock test	100 g single hit, IEC-Standard 68-2-27
Vibration test	15 g / 10 - 2000 Hz, IEC-Standard 68-2-6
Standards, EMC test	Electromagnetic emission EN 61000-6-4, CISPR 16 Electromagnetic immunity EN 61000-6-2 EN 61000-4-2/3/4/6, Level 3/4, Criterium A, CE-qualified
Design, material	
Diagnostic display	LEDs beside connector
Profile model:	
Sensor head	Aluminum
Sensor stroke	Aluminum
Position magnet	Magnet slider or removable U-magnet
Rod model:	
Sensor head	Aluminum
Rod with flange	Stainless steel 1.4301 / AISI 304
Pressure rating	350 bar, 700 bar peak
Position magnet	Ring magnets, U-magnets
Installation	
Mounting position	any orientation
Profile	Movable mounting clamps or T-slot nuts M5 in base channel
U-Magnet, removable	Mounting plate and screws from antimagnetical material
Rod	Threaded flange M18 x 1,5 or 3/4" -16 UNF-3A, Hex nut M18
Position magnet	Mounting plate and screws from antimagnetical material
Electrical connection	
Connection type	2 x 6 pin connector M16 or 2 x 5 pin connector M12 + 4 pin, connector M8 Cable outlet 2 x 0 - 10 m PUR-cable + 4 pin, connector M8
Input voltage	24 VDC (-15 / +20 %)
- Polarity protection	up to -30 VDC
- Overvoltage protection	up to 36 VDC
Current drain	90 mA typical
Ripple	< 1 % S-S
Electric strength	500 VDC (DC ground to machine ground)

Stable Profile Design

Temposonics®-RP offers modular construction, flexible mounting configurations and easy installation. Position measurement is contactless via two versions of permanent magnets.

- A sliding magnet running in profile housing rails. Connection with the mobile machine part is via a ball jointed arm to taking up axial forces.
- A floating magnet, mounted directly on the moving machine part, travels over the profile at a low distance. Its air-gap allows the correction of small misalignments at installation.

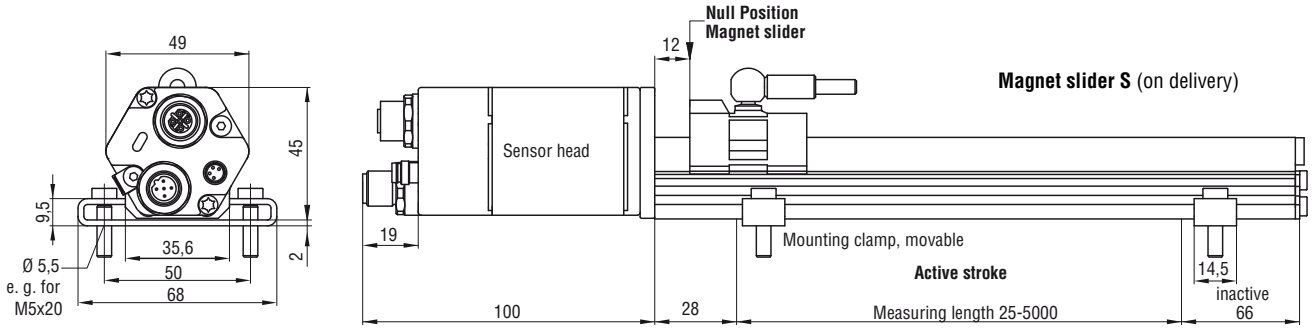

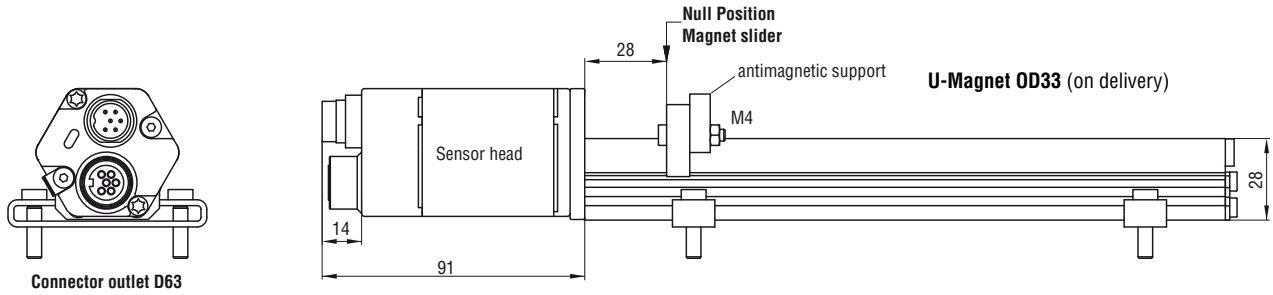

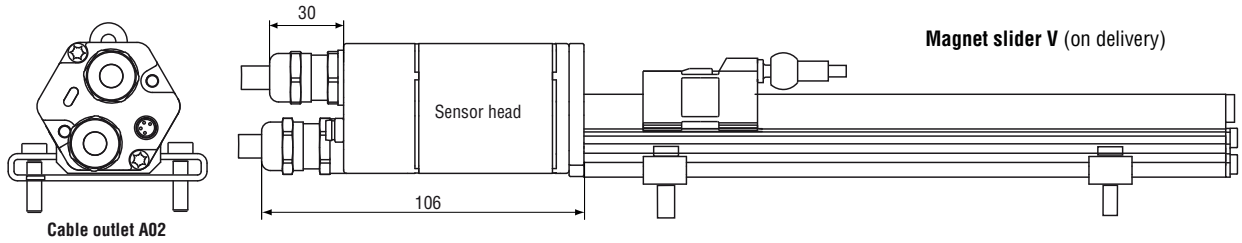

Wiring D63

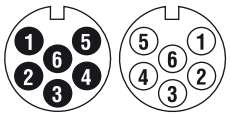

Pin	Cable	Function
1	green	RxD/TxD-N (Bus)
2	red	RxD/TxD-P (Bus)
3	----	DGND (Bus termination)*
4	----	VP (Bus termination)*
5	black	+24 VDC (-15 /+20 %)
6	blue	DC Ground (0V)
-	yellow/green	do not connect

*female only

Wiring D53
Bus connector

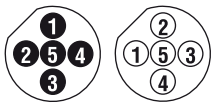

Pin	Cable	Function
1	----	VP+5 (Bus termination)*
2	green	RxD/TxD-N (Bus)
3	----	DGND (Bus termination)*
4	red	RxD/TxD-P (Bus)
5	shield	shield

*female only

Input voltage

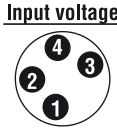

Pin	Cable	Function
1	brown	+24 VDC (-15/+20 %)
2	white	do not connect
3	blue	0 V (GND)
4	black	do not connect

All dimensions in mm

Standard position magnet upon delivery (see chapter Accessories)

Position magnets
Magnet slider S (Part No. 252 182)
Magnet slider V (Part No. 252 184)
U-Magnet OD33 (Part No. 251 416-2)

Connection types
5 pin female connector M12-B (Part No. 560 885)
5 pin male connector M12-B (Part No. 560 884)
4 pin cable connector M8, 90°(Part No. 560 886)

High Pressure Rod Design

Temposonics®-RH with a pressure-resistant stainless steel flange and sensing rod is suitable for use in hydraulic cylinders and externally in all applications where space is a problem. Position measurement is via ring or U-magnets travelling along the sensing rod without any mechanical contact.

Advantage…

the completely operable sensor cartridge can be replaced for servicing easily without opening the fluid circuit.

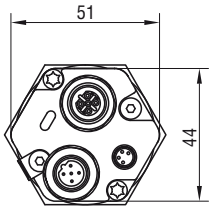

Connector outlet D53

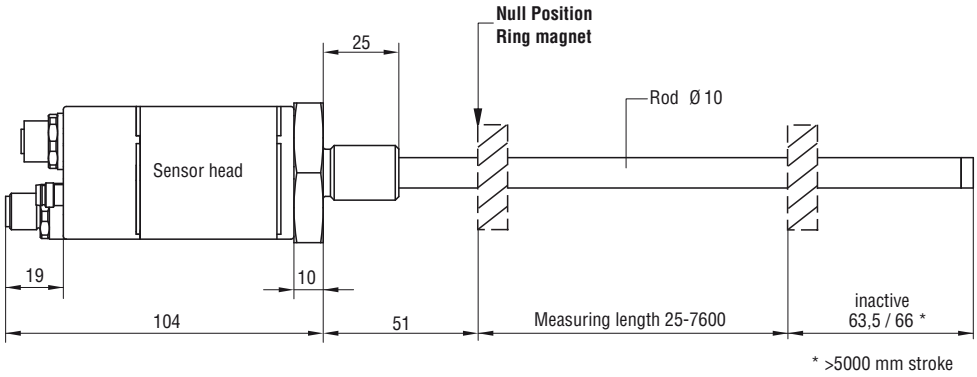

Connector outlet D63

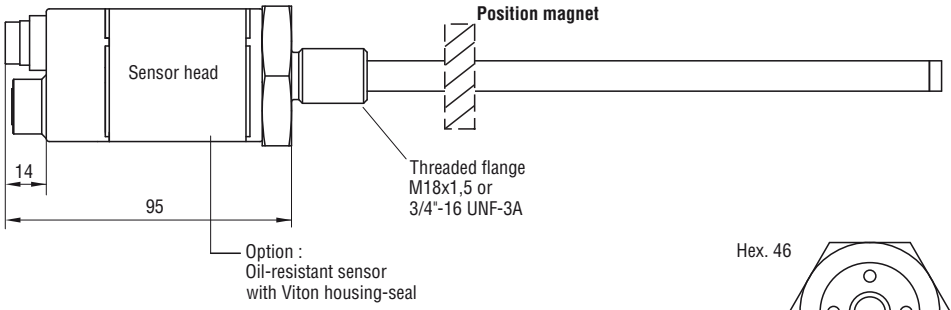

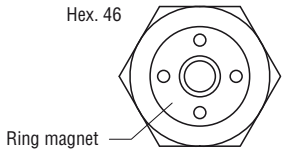

Cable outlet A02

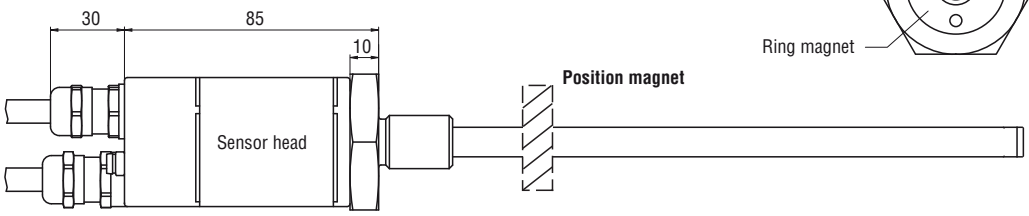

= Magnets must be ordered separately (details see chapter Accessories)

Standard Position Magnets (not on delivery, please order seperatly)

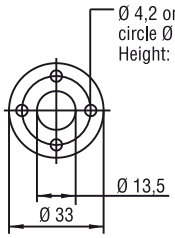

Ring magnet OD33
Part No. 201 542-2

Composite PA-Ferrite-GF20
Weigth ca. 14 g
Operating temperature:
-40 ... +100°C
Surface pressure max. 40 N/mm²
Fastening Torque for M4 screws max. 1 Nm

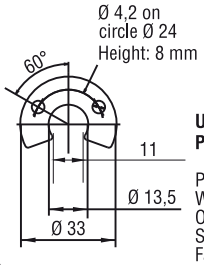

U-Magnet OD33
Part No. 251 416-2

PA-Ferrit-GF20
Weigth ca. 11 g
Operating temperature: -40 ... +100°C
Surface pressure max. 40 N/mm²
Fastening torque for M4 screws max. 1 Nm

All dimensions in mm

Standard position magnet not on delivery (see chapter Accessories)

Position magnets
Ring magnet OD33 (Part No. 201 542-2)
Ring magnet OD25,4 (Part No. 400 533)
U-Magnet OD33 (Part No. 251 416-2)

Connection types
5 pin female connector M12-B (Part No. 560 885)
5 pin male connector M12-B (Part No. 560 884)
4 pin cable connector M8, 90°(Part No. 560 886)

Temposonics® M P Z

Sensor model
RP - Profile
RH - Rod

Design
Profile Temposonics®-RP:
S - Magnet slider, joint at top
V - Magnet slider, joint at front
G - Magnet slider, join at top, blackslash free
M - U-Magnet, OD33
Rod Temposonics®-RH:
M - Flange M18 x 1,5 (Standard)
V - Flange M18 x 1,5
(Fluorelastomer housing-seal)
D - Flange M18 x 1,5 with bushing on rod end
R - Flange M18 x 1,5 with thread M4 at rod end
J - Flange M22 x 1,5, rod Ø 12,7 mm, 800 bar
S - Flange 3/4" - 16 UNF - 3A

Measuring length
Profile - 0025...5000 mm
Rod - 0025...7600 mm
Standard: See chart
Other length upon request.

Connection type
D63 - 2 x 6 pin male/female receptacle M16
D53 - 2 x 5 pin male/female receptacle M12, 4 pin male receptacle M8
A02 - 2 m PUR-cable w/o connector, option: A01-A10 (1-10 m)

Input voltage
1 - +24 VDC
A - +24 VDC, high vibration resistant (measuring length 25 … 2000 mm)

Output
P = Profibus-DP
101 - Profibus-DP, Multi-Position measurement, 1 - 20 positions (Standard)
102 - Profibus-DP, Single-Position measurement (Standard)
103 - Profibus-DP, Singel- and Multi-Position measurement, 1-5 positions and velocity
105 - Profibus-DP, Singel- and Multi-Position measurement, 1-15 positions and velocity, intern linearization
(Specified tolarances valid for Single-Position measurement)

Magnet number for Multi-Position measurement*
Z02 - Z20 = 2 - 20 pcs
** Note: Please specify magnet numbers for your sensing application and order separately*

Note: Projecting and parameterizing a Profibus system will be done with servicetool of Profibus mastersystem supplier.

On delivery Profile Model:
Sensor, magnet slider or U-magnet, 2 mounting clamps up to 1250 mm stroke + 1 clamp for every additional 500 mm. Installation guide + CD-ROM (Electronic Data Sheet with standardized Device Data Base File)

On delivery Rod Model:
Sensor and O-Ring. Installation guide + CD-ROM (Electronic Data Sheet with standardized Device Data Base File)
Magnets must be ordered separately. Use signed magnets for sensors w/LCO

Stroke Length Standard RP	
Stroke Length	**Ordering Steps**
≤ 500 mm	25 mm
500 - 2500 mm	50 mm
2500 - 5000 mm	100 mm
> 5000 mm	250 mm

Stroke Length Standard RH	
Stroke Length	**Ordering Steps**
< 500 mm	5 mm
500 - 750 mm	10 mm
750 - 1000 mm	25 mm
1000-2500 mm	50 mm
2500 - 5000 mm	100 mm
> 5000 mm	250 mm

Accessories page 57 and following.

Temposonics®

Absolute, Non-Contact Position Sensors

R-Series
SSI

Temposonics® RP and RH
Measuring length 25 - 7600 mm

Perfect data processing
0,5 µm

- **Rugged Industrial Sensor**
- **Linear and Absolute Measurement**
- **LEDs for Sensor Diagnostics**
- **Non-Contact Sensing with Highest Durability**
- **Superior Accuracy: Resolution up to 0,5 µm**
- **Linearity better 0,01 % F.S.**
- **Repeatability 0,001 % F.S.**
- **Direct SSI Output, Gray/Binary**
- **Synchronous Measurement for Real-time Sensing**

Sensor Diagnostic Display

Integrated LEDs (green/red) provide basic visual feedback for normal sensor operation and troubleshooting.

Green	Red	Description
ON	OFF	Normal function
ON	ON	Magnet not detected
		Wrong quantity of Magnets
ON	Flashing	Sensor not synchronous*
Flashing	ON	Programming mode

*for synchronous measurement only

Sensor Input

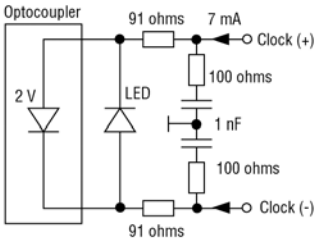

SSI (Synchronous Serial Interface)

The sensors fulfill all requirements of the SSI standard for absolute encoders. Its displacement value is encoded in a binary format and transmitted at high speed to the control device.

MTS offers the ideal solution for high dynamic applications by using different synchronisation modes. Corresponding to the application you can choose the following modes:

Async

In asynchronous mode the Temposonics SSI sensor support the PLC with position values as fast as possible. The sensor works independently (free running mode).

Syn1

In synchronous mode 1 the output of the Temposonics SSI sensor is matched to the data request cycle of the controller. The contouring error is as small as possible, the delay is equal to the cycle time of the sensor's stroke.

Syn2

The synchronous mode 2 is most suitable for applications where the polling cycle of the controller can be faster than the measurement cycle time of the Temposonics SSI sensor. The values for the PLC will be oversampled up to 10 kHz. The delay is similar to the asynchronous mode.

Syn3

The function of the synchronous mode 3 is similar to Syn2 but here any delay will be compensated.

Timing Diagram

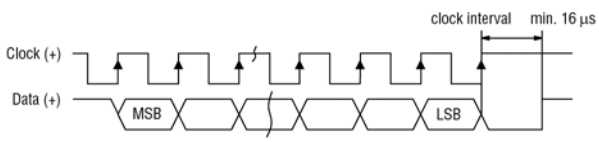

Logic Diagram

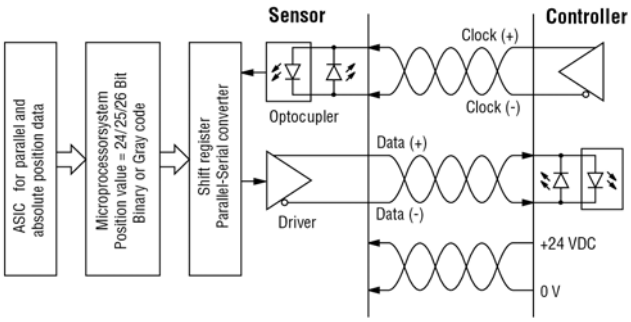

Sensor Field Programming

Temposonics® R-Series sensors are preconfigured at the factory by model code designation. If needed, MTS offers an external service tool for modifying sensor parameters inside the active electrical stroke (minimum 25 mm between set-points) via the standard connection cable. There is no need to open the sensors electronics.

USB-Programmer R-SSI

This hardware converter is required to communicate via USB-port of Windows PC to the sensor. Customized settings are possible by using a MTS programming software (CD-ROM) for:

- *Data length*
- *Data format*
- *Resolution*
- *Measuring direction*
- *Synchronous / asynchronous measurement*
- *Offset, begin of the measurement range*
- *Alarm value (Magnet missing)*
- *Measurement filter*
- *Differential measurement: Distance between two magnets*
- *Speed measurement instead of position*

Test sensor function permits a fast control of installed sensor. Its position values are shown in a diagram.

Programming-Kit, Part No. 253 135-1
(PC-Programmer, Power supply, USB-Cable, Sensor-Cable, Software)

Windows Sensor Programming

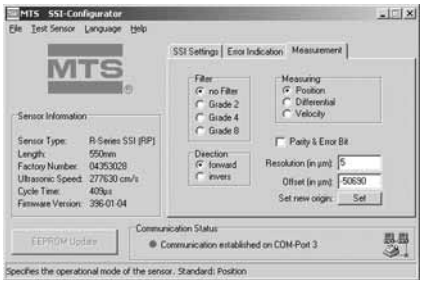

Technical Data

Input	
Measured variable	Displacement, displacement difference between 2 magnets, velocity, internal temperature
Measuring range	Profile 25 - 5000 mm / Rod 25 - 7600 mm / Flexible up to 20 m
Output	
Interface	SSI (Synchronous Serial Interface) - differential signal in SSI standard
Data format	Binary or Gray, optional Parity and Errorbit and internal temperature
Data length	8 ... 32 bit
Update time	Measuring length: 300, 750, 1000, 2000, 5000 mm Measurement rate: 3,7, 3,0, 2,3, 1,2, 0,5 kHz
Data speed	70 kBaud*... 1 MBaud, depending on cable length: Length: < 3, < 50, < 100, < 200, < 400 m Baud rate: 1 MBd, < 400 kBd, < 300 kBd, < 200 kBd, < 100 kBd
Overvoltage protection	up to 36 VDC
Accuracy	
Resolution	Displacement: 0,5 µm, 2 µm, 5 µm, 10 µm i.a. / velocity over 10 measured values: 0,1 mm/s (at 1 ms cycle time)
Linearity	< ± 0,01 % F.S. (minimum ± 40 µm) Option internal linearisation Linearity tolerance: RP/RH < 300 mm: typ. ± 15 µm, max. ± 25 µm, > 300 ... 600 mm: typ. ± 20 µm, max. ± 30 µm > 600 ... 1200 mm: typ. ± 30 µm, max. ± 50 µm RP 1200 ... 3000 mm: typ. ± 45 µm, max. ± 90 µm, 3 ... 5 m: typ. ± 85 µm, max. ± 150 µm
Repeatability	< ± 0,001 % F.S. (minimum ± 2,5 µm)
Temperature coefficient	< 15 ppm/°C
Hysteresis	< 4 µm typical 2 µm
Operating conditions	
Magnet speed	Any
Operating temperature	-40 °C ... +75 °C
Dew point, humidity	90% rel. humidity, no condensation
Protection	Profile: IP65, Rod: IP67, IP68 for cable outlet, RS: IP69K
Shock test	100 g, single hit, IEC-Standard 68-2-27
Vibration test	15 g / 10 - 2000 Hz, IEC-Standard 68-2-6 Option: Vibration resistant 30 g (av)
Standards, EMC test	Electromagnetic emission EN 61000-6-4, CISPR 16 Electromagnetic immunity EN 61000-6-2 EN 61000-4-2/3/4/6, Level 3/4, Criterium A, CE-qualified
Design, material	
Diagnostic display	LEDs beside connector
Profile model:	
Sensor head	Aluminum
Sensor stroke	Aluminum
Position magnet	Magnet slider or removable U-magnet
Rod model:	
Sensor head	Aluminum
Rod with flange	Stainless steel 1.4301 / AISI 304
Pressure rating	350 bar, 700 bar peak option: 800 bar, 1200 bar peak
Position magnet	Ring magnets, U-magnets
- Differentiation measurement	Min. magnet distance 50 mm (in the range of 50 - 75 mm double linearity)
Installation	
Mounting position	Any orientation
Profile	Movable mounting clamps or T-slot nuts M5 in base channel
U-Magnet, removable	Mounting plate and screws from antimagnetical material
Rod	Threaded flange M18 x 1,5 or 3/4" -16 UNF-3A
Position magnet	Mounting plate and screws from antimagnetical material
Electrical connection	
Connection type	7 pin connector M16 or cable outlet
Input voltage	24 VDC (-15 / +20 %)
- Polarity protection	up to -30 VDC
- Overvoltage protection	up to 36 VDC
Current drain	100 mA typical
Ripple (LF)	< 1 % S-S
Electric strength	500 VDC (DC ground to machine ground)

* with standard monoflop of 16 µs

Stable Profile Design

Temposonics®-RP offers modular construction, flexible mounting configurations and easy installation. Position measurement is contactless via two versions of permanent magnets.

- A sliding magnet running in profile housing rails. Connection with the mobile machine part is via a ball jointed arm to taking up axial forces.
- A floating magnet, mounted directly on the moving machine part, travels over the profile at a low distance. Its air-gap allows the correction of small misalignments at installation.

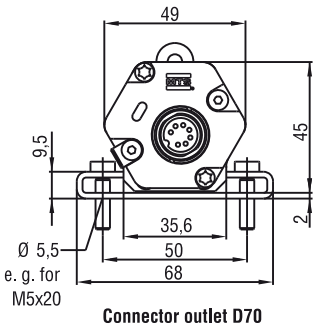

Connector outlet D70

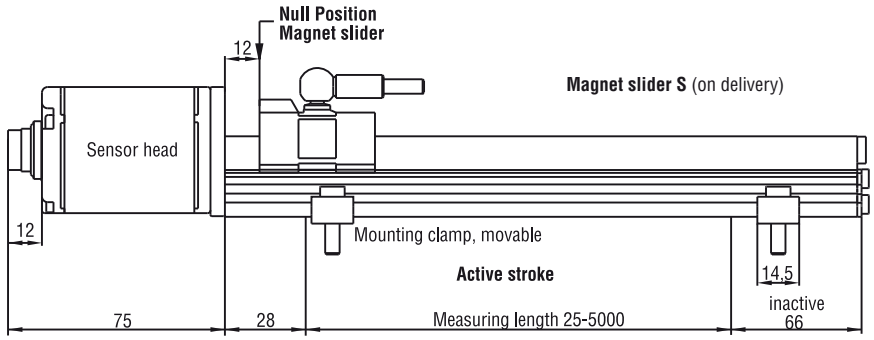

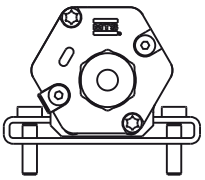

Cable outlet P02

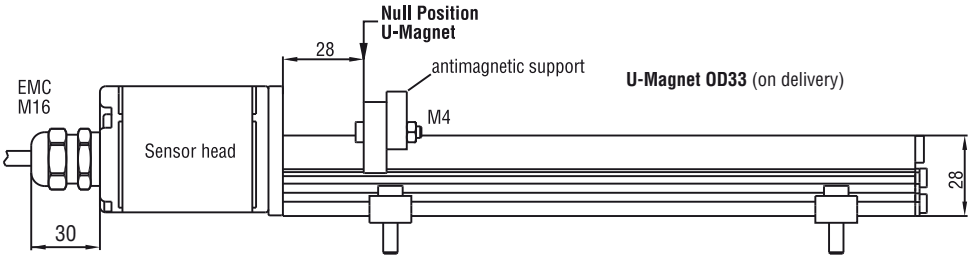

Wiring	Pin	Cable	Function
	1	grey	Data (-)
	2	pink	Data (+)
	3	yellow	Clock (+)
	4	green	Clock (-)
	5	brown	+24 VDC
	6	white	0 V (GND)
	7	do not connect	

Male insert sensor plug rear of cable connector

All dimensions in mm

Standard position magnet upon delivery (see chapter Accessories)

Position magnets
Magnet slider S (Part No. 252 182)
Magnet slider V (Part No. 252 184)
U-Magnet OD33 (Part No. 251 416-2)

Connection types
7 pin female connector M16 (Part No. 370 624)
7 pin female connector M16, 90° (Part No. 560 779)

High Pressure Rod Design

Temposonics®-RH with a pressure-resistant stainless steel flange and sensing rod is suitable for use in hydraulic cylinders and externally in all applications where space is a problem. Position measurement is via ring or U-magnets travelling along the sensing rod without any mechanical contact.

Advantage…

the completely operable sensor cartridge can be replaced for servicing easily without opening the fluid circuit.

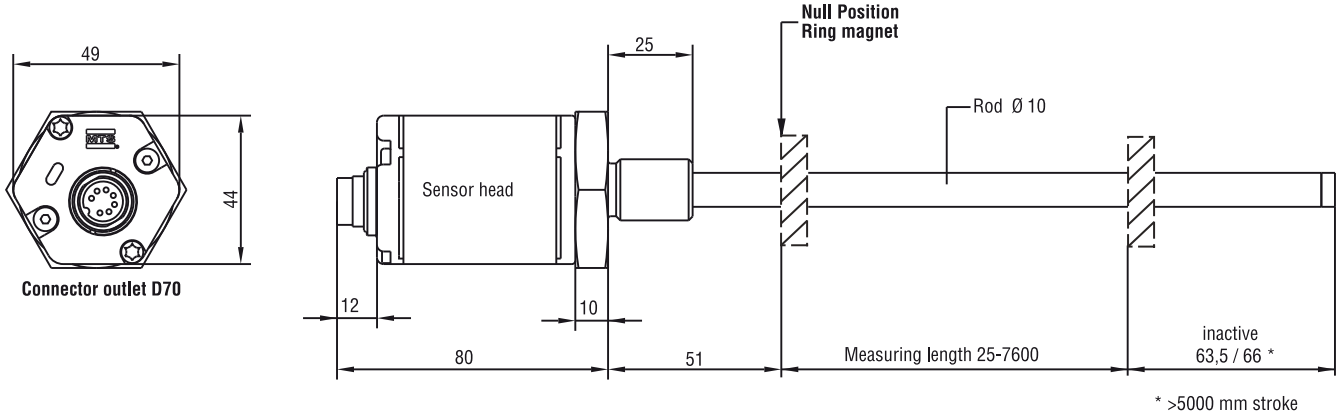

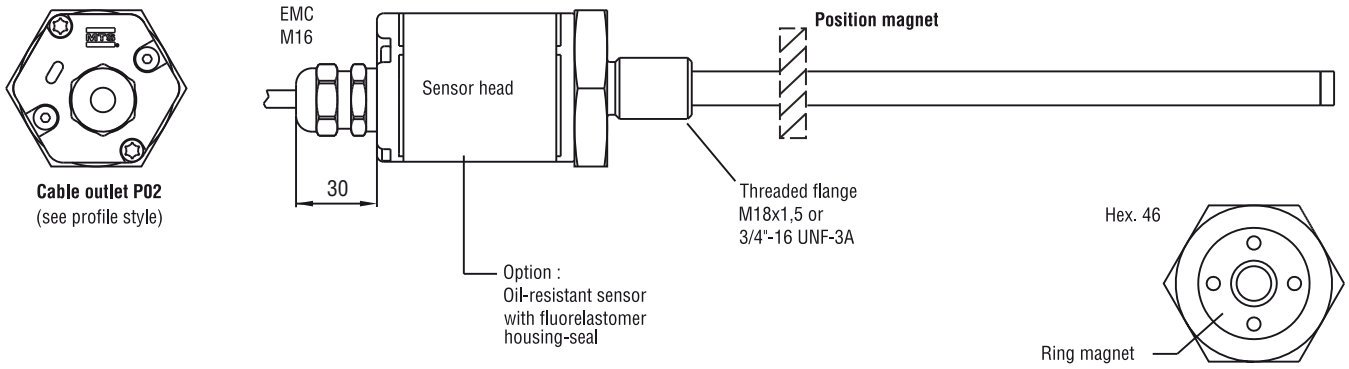

= **Magnets must be ordered separately (details see chapter Accessories)**

Standard Position Magnets (not on delivery, please order seperatly)

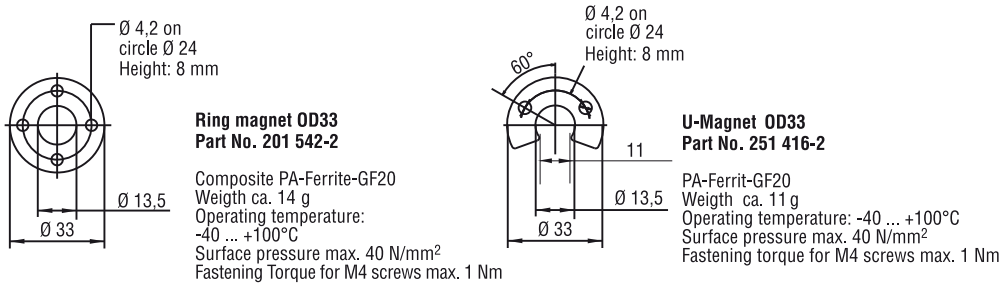

Ring magnet OD33
Part No. 201 542-2

Composite PA-Ferrite-GF20
Weigth ca. 14 g
Operating temperature:
-40 ... +100°C
Surface pressure max. 40 N/mm²
Fastening Torque for M4 screws max. 1 Nm

U-Magnet OD33
Part No. 251 416-2

PA-Ferrit-GF20
Weigth ca. 11 g
Operating temperature: -40 ... +100°C
Surface pressure max. 40 N/mm²
Fastening torque for M4 screws max. 1 Nm

All dimensions in mm

Standard position magnet not on delivery (see chapter Accessories)

Position magnets
Ring magnet OD33 (Part No. 201 542-2)
Ring magnet OD25,4 (Part No. 400 533)
U-Magnet OD33 (Part No. 251 416-2)

Connection types
7 pin female connector M16 (Part No. 370 624)
7 pin female connector M16, 90° (Part No. 560 779)

Temposonics® M 1 S [1] [2] [3] [4] [5] [6] [7] [8] [9]

Sensor model
RP - Profile
RH - Rod

Design
Profile Temposonics®-RP:
S - Magnet slider, joint at top
V - Magnet slider, joint at front
G - Magnet slider, join at top, blackslash free
M - U-Magnet, OD33
Rod Temposonics®-RH:
M - Flange M18 x 1,5 (Standard)
V - Flange M18 x 1,5 (Fluorelastomer housing-seal)
D - Flange M18 x 1,5 with bushing on rod end
R - Flange M18 x 1,5 with thread M4 at rod end
J - Flange M22 x 1,5, rod Ø 12,7 mm, 800 bar
S - Flange 3/4" - 16 UNF - 3A

Measuring length
Profile - 0025...5000 mm
Rod - 0025...7600 mm
Standard: See chart
Other length upon request.

Stroke Length Standard RP	
Stroke Length	**Ordering Steps**
≤ 500 mm	25 mm
500 - 2500 mm	50 mm
2500 - 5000 mm	100 mm
> 5000 mm	250 mm

Stroke Length Standard RH	
Stroke Length	**Ordering Steps**
< 500 mm	5 mm
500 - 750 mm	10 mm
750 - 1000 mm	25 mm
1000-2500 mm	50 mm
2500 - 5000 mm	100 mm
> 5000 mm	250 mm

Connection type
D70 - 7 pin male receptacle M16
P02 - 2 m PUR-cable w/o connector, option: P01-P10 (1-10 m)

Input voltage / Conditions of use
1 - +24 VDC
A - +24 VDC / vibration resistant (measuring length 25 … 2000 mm)

Output
S [1][2][3][4][5][6][7][8][9] = Synchronous Serial Interface

[1] Data length:	**1** - 25 Bit • **2** - 24 Bit • **3** - 26 Bit
[2] Output format	**B** - Binary • **G** - Gray
[3] Resolution (mm):	**1** - 0,005 • **2** - 0,01 • **3** - 0,05 • **4** - 0,1 • **5** - 0,02 • **6** - 0,002 • **8** - 0,001 • **9** - 0,0005
[4] Performance:	**1** - Standard • **8** - Noise reduction filter (8 values) • **D** - No filter + error delay 10 cycles **G** - Noise reduction filter (8 values) + error delay 10 cycles • **K** - Peak reduction filter (8 values) **N** - Peak reduction filter (8 values) + error delay 10 cycles
[5][6] Signal options:	**00** - Measuring direction forward **01** - Measuring direction reverse **02** - Measuring direction forward, synchronised measurement **05** - Measuring direction forward, Bit 25 = Alarm, Bit 26 = Parity even **16** - Measuring direction forward, internal linearization **99** - for optional further combinations (use next fields **[7]**,**[8]**,**[9]**)

[7] Measurement contents	**1** - Position • **2** - Differential • **3** - Velocity • **4** - Position + Temperature (only with data length = 24 bit) **5** - Differential + Temperature (only with data length = 24 bit) • **6** - Velocity + Temperature (only with data length = 24 bit)
[8] Direction and sync. mode	**1** - Forward async • **2** - Forward sync1 • **3** - Forward sync2 • **4** - Forward sync3 • **5** - Reverse async • **6** - Reverse sync1 **7** - Reverse sync2 • **8** - Reverse sync3
[9] Intern Linearization & Communication Diagnostics	**0** - No further option • **1** - Linearity Correction Option • **2** - Additional alarm bit + parity even bit (not available for temperature output, only data length 26 bit) **4** - Additional alarm bit + parity even bit and Linearity Correction Option (not available for temperature output, only data length 26 bit)

On delivery Profile model: Sensor, Position magnet, 2 mounting clamps up to 1250 mm + 1 clamp for every additional 500 mm.

On delivery Rod model: Sensor and O-Ring. Magnets must be ordered separately. Use signed magnets for sensors w/LCO

Accessories page 57 and following.

MOUNTING / INSTALLATION RP + RH

Flexible Installation in any Position

Profile Model

Normally, the sensor is firmly installed - fixed on a straight surface of the machine with movable mounting clamps or M5 screws in base channel (2 mounting clamps up to 1250 mm + 1 clamp for every 500 mm) - whilst the magnet is mounted at the mobile machine part.

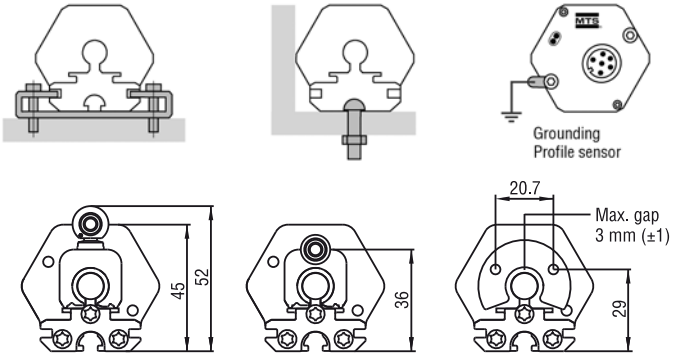

Magnet slider S
Part No. 252 182

Magnet slider V
Part No. 252 184

U-Magnet OD33
Part No. 251 416-2

Rod Model

Mount the sensor via flange thread or a hex nut. If possible, non-magnetisable material should be used for mounting support (dimensions as shown). With horizontal mounting, longer sensors (from 1 meter) must be provided with mechanical support.

Hydraulic Sealing

Recommended is sealing of the flange facing with O-Ring (e.g. 22,4 x 2,65) in a cylinder cover nut or an O-Ring 15,3 x 2,2 in undercut.

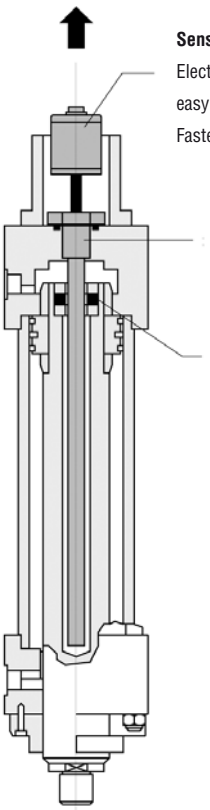

Sensor Cartridge
Electronic head + sensor element
easy to replace with 2 screws M4
Fastening torque ≤ 1,3 Nm

Sensor Hydraulic Housing
lange with tube becomes a permanent part of the cylinder

Ring Magnet

Minimum assembly distance

1. Non-magnetisable material

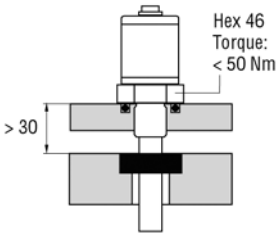

Recommended hydraulic sealing

2. Magnetisable material

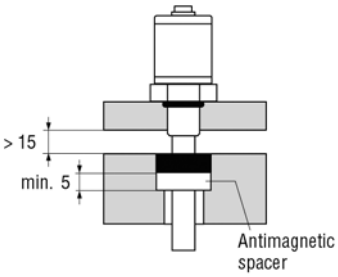

On delivery:
O-Ring 15,3 x 2,2
See ISO 6149-1

Cylinder Installation

When used for direct stroke measurement in fluid cylinders, the sensor's high pressure, stainless steel rod installs into a bore in the piston head/rod assembly as illustrated. That guarantees a longlife and trouble-free operation - independent of used hydraulic fluid.

The sensor cartridge can be removed from the flange and rod housing while still installed in the cylinder. This procedure allows quick and easy sensor cartridge replacement, without the loss of hydraulic pressure.

All dimensions in mm

CAN YOU IMAGINE…a sensor used in the plastics industry, which increases product quality and productivity and, at the same time, extends the useful life of the machine, by high-accuracy measurement of the mould movement.

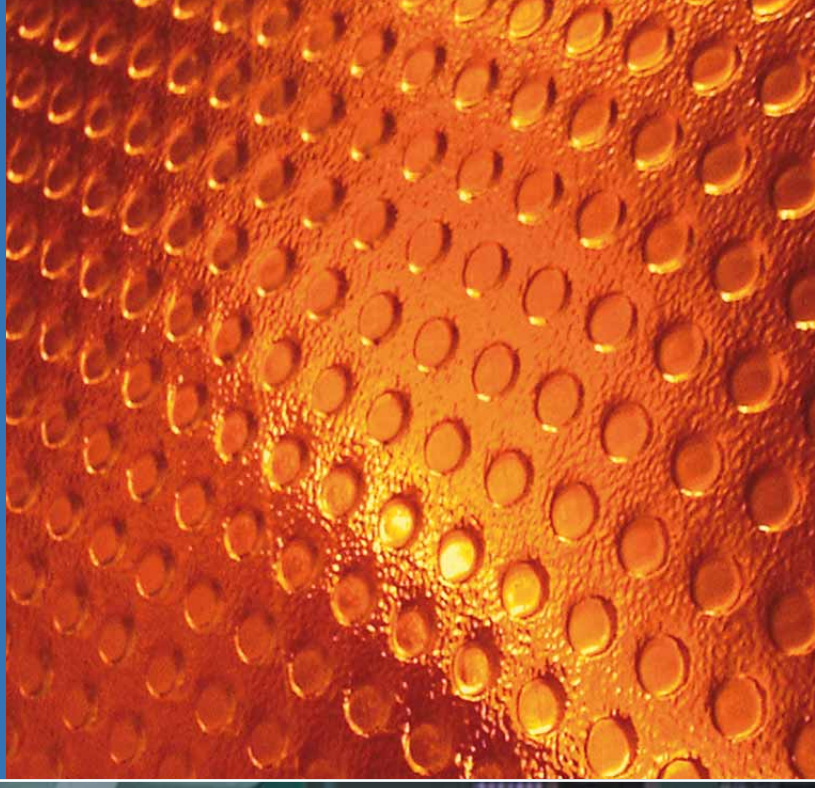

Temposonics®

Absolute, Non-Contact Position Sensors

R-Series
Rod Model RF

Temposonics®-RF
Measuring range 100 - 20.000 mm

A very flexible Sensor

- **Rugged Industrial Sensor**
- **Linear and Absolute Measurement**
- **LEDs for Sensor Diagnostics**
- **Contactless Sensing with Highest Durability**
- **Superior Accuracy: Linearity better 0,02 % F.S.**
- **Repeatability 0,001 % F.S.**
- **Direct Analog Output for Displacement:**
- **Analog / SSI / CANbus / Profibus-DP / EtherCAT**
- **Multi-Position Measurement: max. 20 Positions with 1 Sensor**
- **Cost-effective shipment for long measuring length**

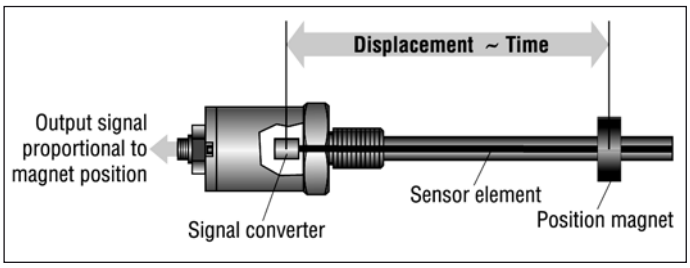

Temposonics® RF the extremely robust sensor, ideal for continuous operation under harshest industrial conditions is completely modular in mechanic and electronic design. The sensor head accommodates the complete modular electronic interface with active signal conditioning. Double encapsulation ensures high operating safety and optimum EMC protection. The position transmitter, a permanent magnet - fixed at the mobile machine part - drives contactlessly over the sensor's stroke and starts measuring through the housing wall. The RF sensors are housed in a teflon coated stainless steel housing that is flexible and that can be bent in an arc to an 250 mm min. bend radius arc. Specifications are measured with flexible sensor element at a 0° degree bend radius. Most operating parameters are identical to its rigid cousin.

Technical Data

Input	
Measured variables	- Displacement - Velocity - Multi-Position measurement max. 20 positions (CANbus, Profibus, EtherCAT)
Measuring range	100 - 20.000 mm
Output	
Interfaces	Analog, SSI, CANbus, Profibus-DP, EtherCAT, POWERLINK
Accuracy	
Resolution	output dependent
Linearity	< ± 0,02 % F.S. (Min ± 100 µm)
Repeatability	< ± 0,001 % F.S. (Minimum ± 2,5 µm)
Hysteresis	< 4 µm
Operating conditions	
Magnet speed	any
Operating temperature	-40 °C ... +75 °C
Dew point, humidity	90% rel. humidity, no condensation
Protection	IP30 (IP65 rating only for professional mounted guide pipe IP65 and if mating connectors are correctly fitted)
Shock test	100 g (single shock IEC-Standard 68-2-27)
Vibration test	5 g / 10 - 150 Hz IEC-Standard 68-2-C
Standards, EMC test	Electromagnetic emission EN 61000-6-4, CISPR 16 Electromagnetic immunity EN 61000-6-2 EN 61000-4-2/3/4/6, Level 3/4, Criterium A, CE-qualified
Design, Material	
Diagnostic display	LEDs beside connector
Sensor head	Aluminum-diecasting housing
Sensor stroke	Flexible plastic pipe, min. bend radius 250 mm, radius for shipping 400 mm
Position magnet	Permanent magnet
Electrical connection	
Connection type	Connector or cable outlet (output dependent)
Input voltage	24 VDC (-15 / +20 %)
- Polarity protection	up to -30 VDC
- Overvoltage protection	up to 36 VDC
Current drain	100 mA typical
Ripple	< 1 % S-S
Electric strength	500 VDC (DC ground to machine ground)

Info:
For detailed technical data and electrical connection for the outputs please see data sheets: R-Series Analog, SSI, CANbus, Profibus, EtherCAT.

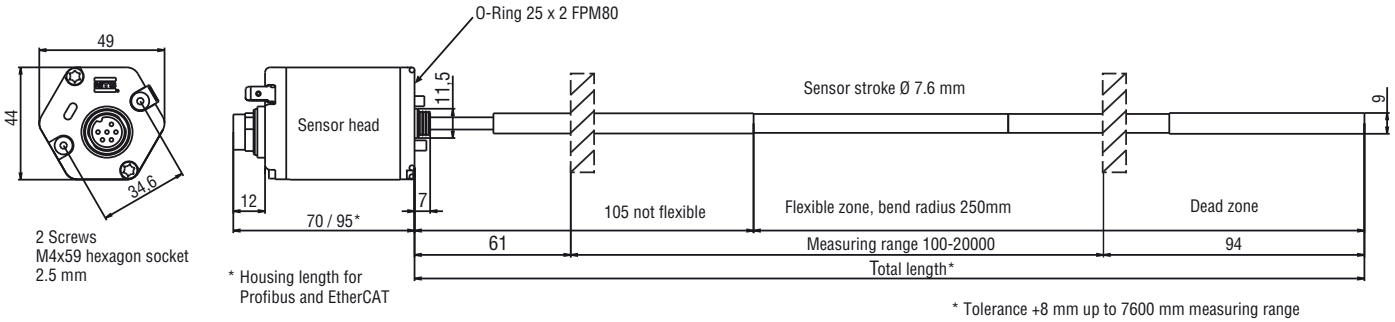

Option:

Pressure Housing Pipe OD 12,7 and Flange

Pressure housing pipe with flange is designed specifically for Temposonics® RF. It provides protection from high pressures, as found in hydraulic cylinders, up to 350 bar static, 700 bar spike. Typically, a bore 18 mm is used to match the large ring magnet.

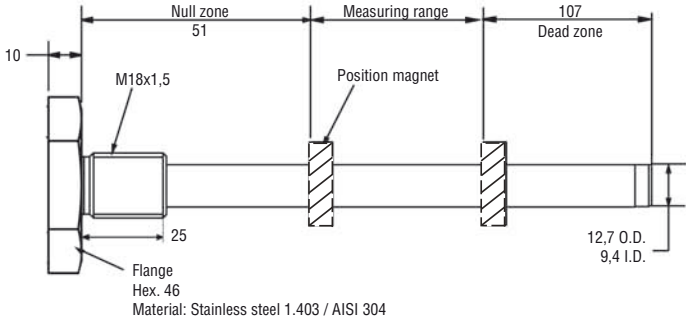

= Magnets must be ordered separately (details see chapter accessories)

Position Magnets (not on delivery, please order seperatly)

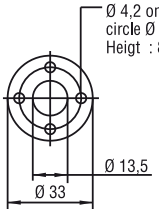

Ring magnet OD33
Part No. 201 542-2

PA-Ferrit-GF20
Weigth ca. 14 g
Operating temperature: -40 ... +100°C
Surface pressure max. 40 N/mm²
Fastening torque for M4 screws max. 1 Nm

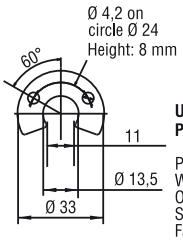

U-Magnet OD33
Part No. 251 416-2

PA-Ferrit-GF20
Weigth ca. 11 g
Operating temperature: -40 ... +100°C
Surface pressure max. 40 N/mm²
Fastening torque for M4 screws max. 1 Nm

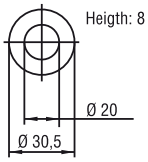

Ring magnet OD30,5
Part No. 402 316

PA-Ferrit Verbund
Weigth ca. 15 g
Operating temperature: -40 ... +100°C
Surface pressure max. 40 N/mm²

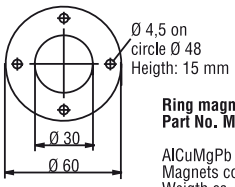

Ring magnet OD60
Part No. MT 0162

AlCuMgPb
Magnets compound-filled
Weigth ca. 90 g
Operating temperature: -40 ... +75°C

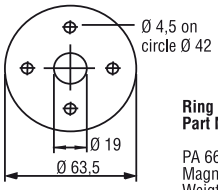

Ring magnet OD63,5
Part No. 201 554

PA 66-GF 30
Magnets compound-filled
Weigth ca. 25g
Operating temperature: -40 ... +75°C

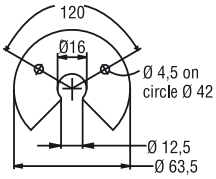

U-Magnet OD63,5
Part No. 201 553

PA 66-GF 30
Magnets compound-filled
Weigth ca. 25 g
Operating temperature: -40 ... +75°C

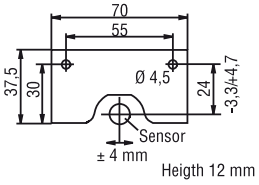

Position magnet 70x37,5
Part No. 252 185

AlMg4.5Mn, black anodized
Magnets compound-filled
Weigth ca. 75 g
Operating temperature: -40 ... +75°C

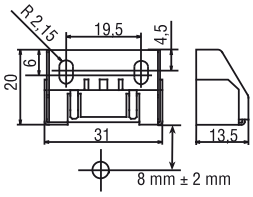

Block magnet L
Part No. 252 887

Magnet ground: CuSN6 zinc-plated
Magnet: Hartferrit
Weigth ca. 20 g
Operating temperature: -40 ... +75°C

All dimensions in mm

Standard position magnet not on delivery (see chapter Accessories)

Position magnets
Ring magnet OD33 (Part No. 201 542-2)
Ring magnet OD25,4 (Part No. 400 533)
U-Magnet OD33 (Part No. 251 416-2)

Connection types
Connector or cable outlet output dependent

Sensor Installation

Mounting of sensor head requires the use of 2 non-ferrous screws M4x59. Long sensors require a guide pipe support (inside diameter of 9,4 mm) of non-magnetisable material, straight or bent to the desired shape.
For easy installation the sensor can be supplied with a hex 46 flange (accessorie) bored for above mounting screws.
Optional you can order a pressure housing pipe OD 12,7 mm with flange up to max 7500 mm measuring length.

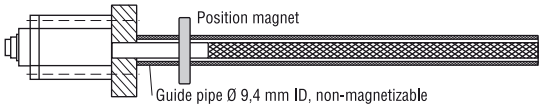

Straight measurements

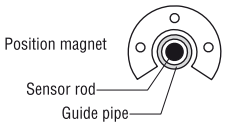

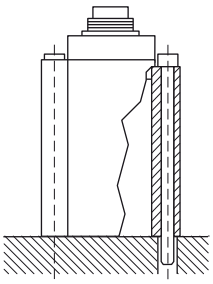

Note
A flexible sensor requires supports or anchoring to maintain proper alignment between sensor rod and the magnet, otherwise the sensor output signal can be interfered or lost.

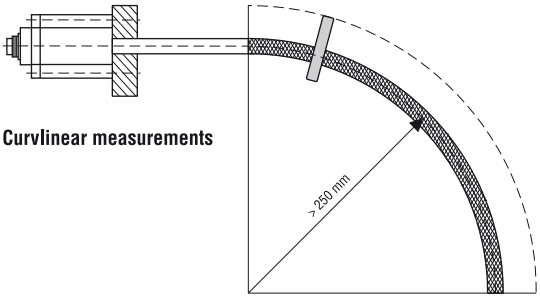

Curvlinear measurements

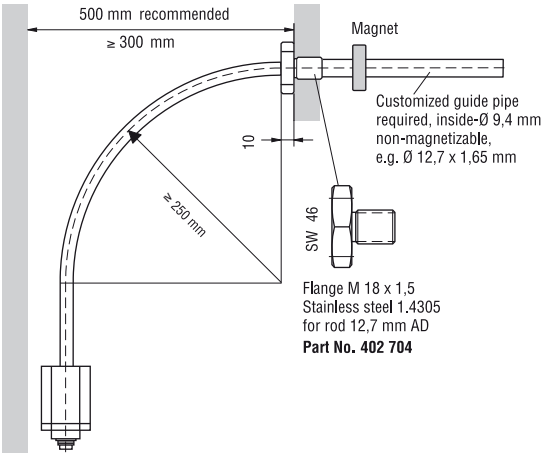

Required for substitute sensors mounted on flange Part No. 401 035:
Use 2 Screws 8-32 x 2,35 Part No. 402 617 which supplied as attachment with each sensor. The red rubber seal between sensor head and sensor stroke slit carefully and remove.

All dimensions in mm

Temposonics® R F ▢ ▢ ▢ ▢ ▢ ▢ ▢ M ...

Model
RF - Flexible sensor stroke

Design
C - Basic sensor
M – Flange M18x1,5
S – Flange ¾“ – 16 UNF – 3A

Measuring range
00100...20.000 mm
Up to 1000 in 50 mm steps, up 1000 in 250 mm steps

Further parameter
See data sheets R-Series according to the required output
Analog / SSI / CANbus / Profibus / EtherCAT / POWERLINK

Magnets and Accessories must be ordered separately.

Accessories	Part No.
Ring magnet OD33, Standard	201 542-2
U-Magnet OD33	251 416-2
Ring magnet OD30,5	402 316
Ring magnet OD60	MT 0162
Ring magnet OD63,5	201 554
U-Magnet OD63,5	201 553
Position magnet 70x37,5	252 185
Block magnet	403 448
Flange M18x1,5 for pressure housing pipe 12,7 mm	402 704

Pressure Housing Pipe (Please order separately)

Temposonics® H D ▢ ▢ ▢ ▢ ▢ M

Model
HD - Pressure housing pipe OD 12,7 mm
with flange for Temposonics® RF M18x1,5

Measuring range
255...7500 mm
Standard: See chart

Stroke Length Standard RF	
Stroke Length	**Ordering Steps**
< 1000 mm	50 mm
1000 - 5000 mm	100 mm
5000 - 10000 mm	250 mm
10000 - 15000 mm	500 mm
> 15000 mm	1000 mm

CAN YOU IMAGINE…a hillside threatened by land slipping. An 18 m long MTS Temposonics® sensor detects even smallest ground movements and can predict land slipping. In other words: it is able to prevent catastrophies.

Intelligence, high speed and utmost precision. High-accuracy MTS sensors offer all possibilities for an increase of the efficiency and value of your products.

Innovation: The invention of the magnetostrictive measurement method was only a first step.
MTS Sensors are continuously striving to enhance their product functionality and to find new fields of application for magnetostriction technology.

Flexibility: MTS customer-oriented engineering means that the technology can be used both for standard and individual product solutions. Whatever the requirements on length, size, pressure resistance or output may be, MTS sensors are versatile and flexible.

Reliability: Integrate and forget them. Based on the magnetostrictive technology, high-resolution sensor operation is completely contactless and free of wear. Recalibration is omitted. The absolute measuring principle is a warranty that the sensors are immediately ready for operation also after trouble.

Quick reaction: MTS delivery times are extremely short. Delivery within two weeks after ordering supports quick realization of your project.
In urgent cases, MTS has the capacity to complete production and shipment even within 48 hours.

Temposonics®

Absolute, Non-Contact Position Sensors

R-Series
Rod Model RD4

Temposonics®-RD4
Measuring range 25 - 5000 mm

Compact Sensor for Hydraulic Cylinders and Machine Manufacturing

- **Rugged Industrial Sensor**
- **Linear and Absolute Measurement**
- **LEDs for Sensor Diagnostics**
- **Non-contact Sensing with Highest Durability**
- **Superior Accuracy: Linearity better 0,02 % F.S.**
- **Repeatability 0,001 % F.S.**
- **Direct Output for Displacement + Velocity**
  Analog / SSI / CANbus / Profibus-DP / EtherCAT
- **Multi-Position Measurement: max. 20 Positions with 1 Sensor**

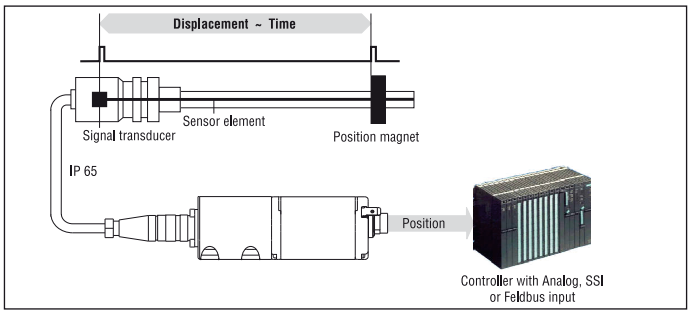

Temposonics® RD4 the extremely robust sensor, ideal for continuous operation under harshest industrial conditions is completely modular in mechanic and electronic design. A rod-shaped sensor housing protects the sensing element in which the measurement signal arises. The sensor head accommodates the complete modulare electronic interface with active signal conditioning. Double encapsulation ensures high operation safety and optimum EMC protection.
The position transmitter, a permanent magnet fixed at the mobile machine part, drives contactlessly over the sensor's stroke and starts measuring through the housing wall.

Temposonics®-RD4 sensors were designed for installation into hydraulic cylinders, specifically for use in standard clevis head cylinders or any space limited cylinder application. They consist of:

- The pressure proof stainless steel sensor rod with fitting or threaded flange, which protects the sensing element in which the measurement signal arises. It fits into the bored piston rod.
- The external industrial housing (IP67) which accommodates the modular electronic interface with active signal conditoring. The sensor electronics is connected to the basic-sensor via side or bottom cable entry.

Technical Data

Input	
Measured variables	- Displacement - Velocity - Multi-Position measurement max. 20 positions (CANbus, Profibus, EtherCAT)
Measuring range	25...5000 mm
Output	
Interfaces	Analog, SSI, CANbus, Profibus-DP, EtherCAT, POWERLINK
Accuracy	
Resolution	Output dependent
Linearity	< ± 0,02 % F.S. (Min ± 50 µm)*
Repeatability	< ± 0,001 % F.S. (Minimum ± 2,5 µm)
Hysteresis	< 4 µm
Ripple/Jitter	Analog: 0,01 % F.S. / Digital: < ± 10 µm
Operating conditions	
Magnet speed	Any
Operating temperature	-40 °C ... +75 °C
Dew point, humidity	90% rel. humidity, no condensation
Protection	Sensor electronics IP67 (with professional mounted housing and connectors) Measuring rod with connecting cable for side cable entry IP65 Measuring rod with single wires and flat connector with bottom cable entry IP 30
Shock test	100 g (single shock IEC-Standard 68-2-27)
Vibration test	10 g / 10 - 2000 Hz IEC-Standard 68-2-6
Standards, EMC test*	Electromagnetic emission EN 61000-6-4, CISPR 16 Electromagnetic immunity EN 61000-6-2 EN 61000-4-2/3/4/6, Level 3/4, criterium A, CE-qualified
*Measuring rod and connecting cable mounted inside metal housing	
Design, Material	
Diagnostic display	LED besides connector
Sensor electronics	Aluminum-diecasting housing
Measuring rod with flange	Stainless steel 1.4301 / AISI 304
Operating pressure	350 bar, 700 bar peak
Position magnet	Ring magnets
Electrical connection	
Connection type	Connector or cable outlet (output dependent)
Input voltage	24 VDC (-15 / +20 %)
- Polarity protection	up to -30 VDC
- Overvoltage protection	up to 36 VDC
Current drain	100 mA typical
Ripple	< 1 % S-S
Electric strength	500 VDC (DC ground to machine ground)

*For rod style “S” the linearity deviation can be higher in the first 30 mm (1.2 in.) of stroke length

Info:
For detailed technical data and electrical connection for the outputs please see data sheets: R-Series Analog, SSI, CANbus, Profibus, EtherCAT

Electronics with Side Cable Entry for the Measuring Rod

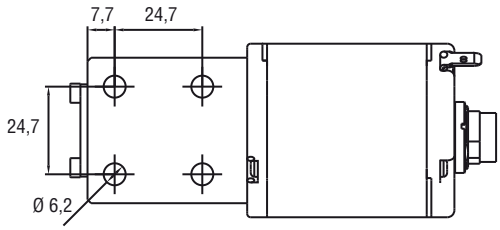

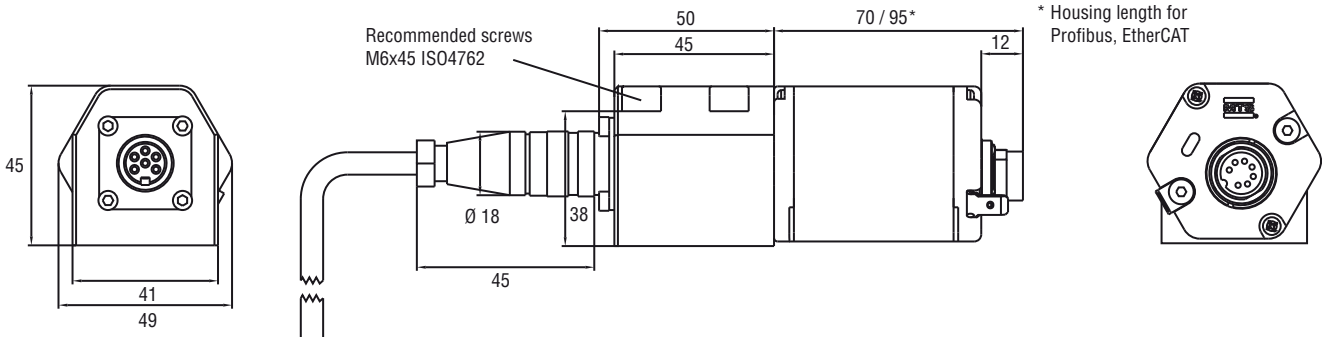

Rod Type S

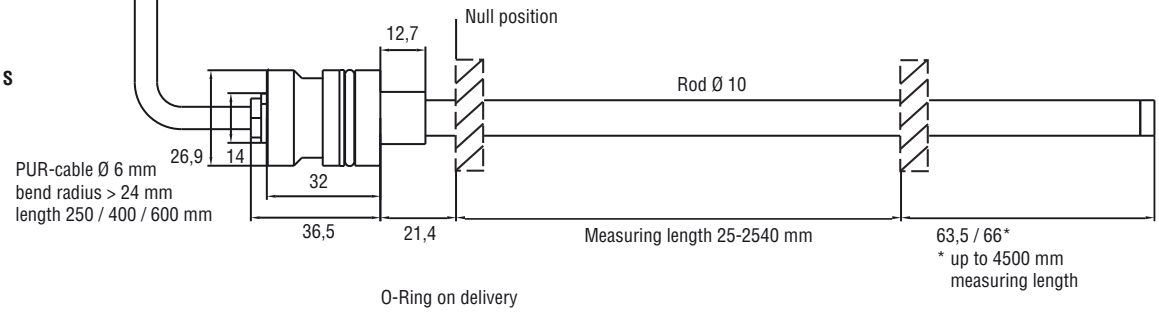

Rod Type M

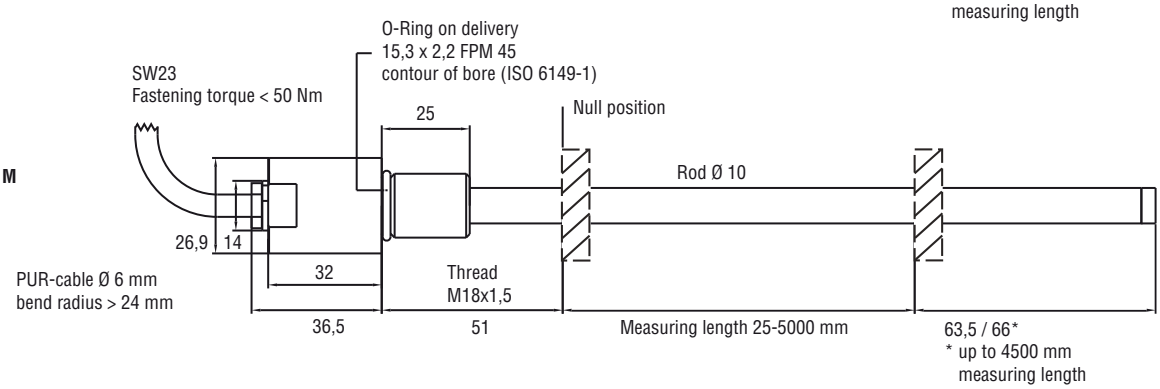

Rod Type C

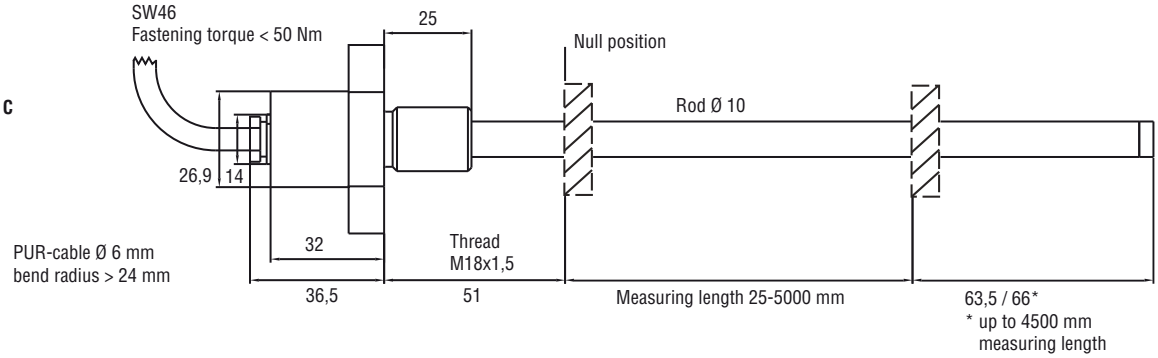

= Magnets must be ordered separately (details see chapter Accessories)

All dimensions in mm

Electronics with bottom cable entry for the measuring rod

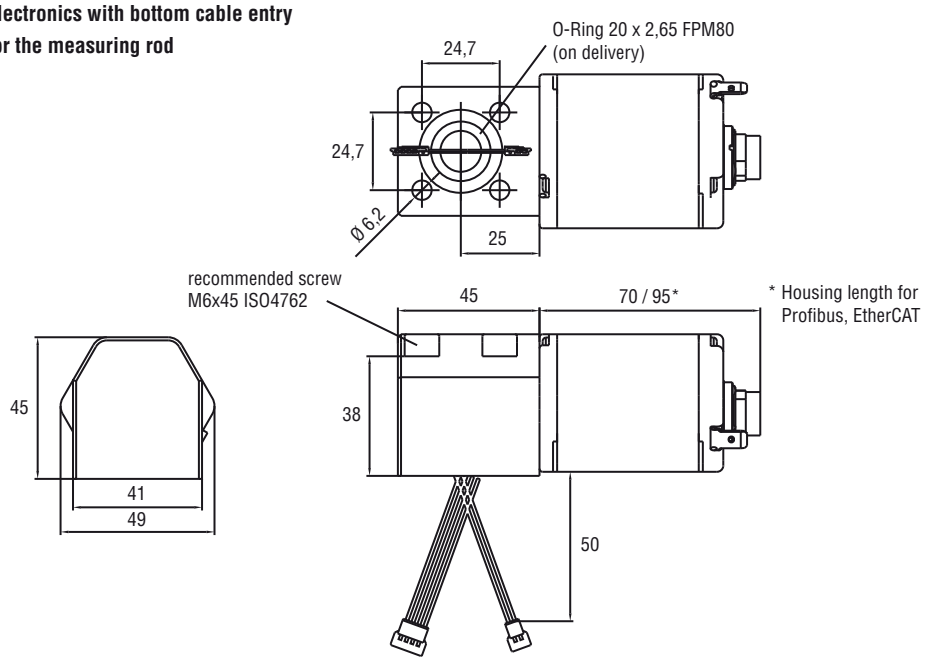

= **Magnets must be ordered seperately (details see chapter Accessories)**

ATTENTION
To fulfill the EMC standards for emission and susceptibility require a shielded housing for the interconnection cable. This cable has to be connected to machine ground.

Connecting example SSI

Rod Type S

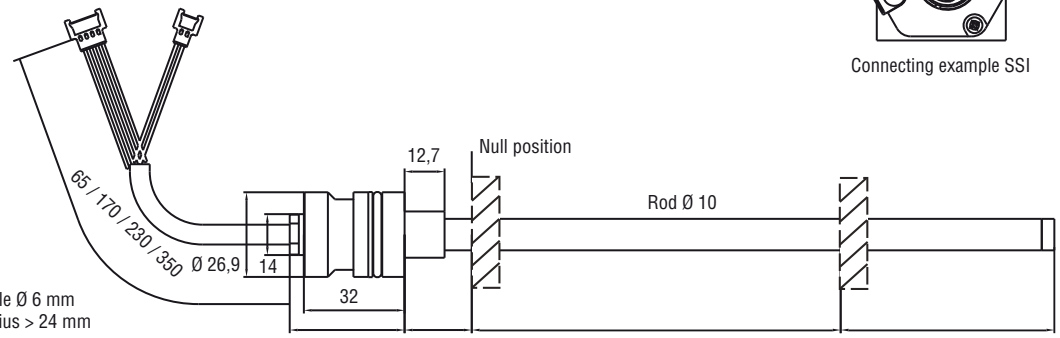

Rod Type M

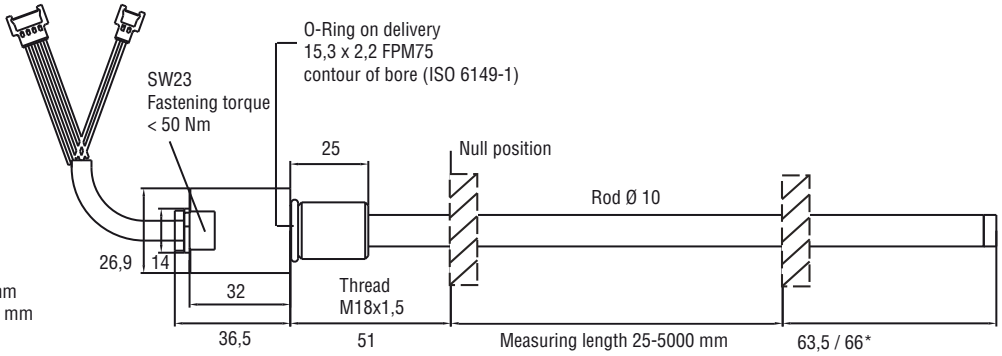

Rod Type C

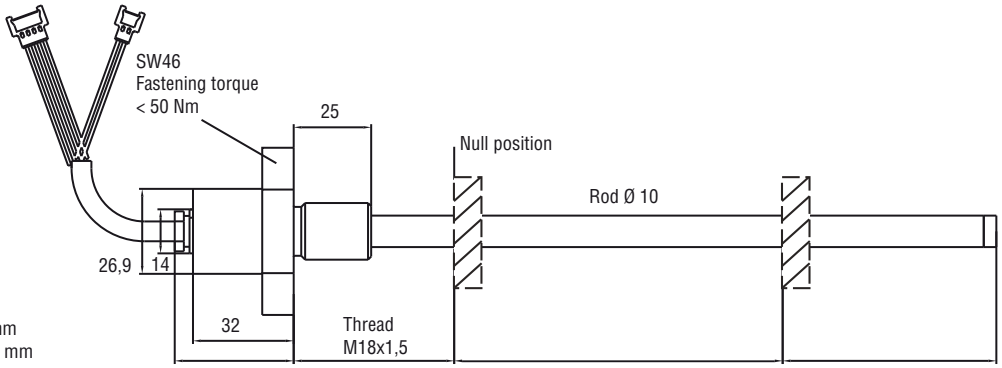

All dimensions in mm

Sensor Installation with Fitting Flange »S«

Cylinder Mounting

For installation in hydraulic cylinders, we recommend the sensor system consisting of the rod and the mounting flange, and the B type electronics.

Install the rod using the fit and seal it off by means of the O-ring and the supporting ring. Block the rod using a shoulder screw.
The adaptor plate of the separate electronics housing facilitates mounting on the outside of small cylinders. Advantage of this version: Connection to the measuring rod is via the bottom of the housing. Thus the sensor system is fully encapsulated and protected against external disturbances.

When installing the cylinder, please note:

- The position magnet should not grind over the measuring rod.
- The bore in the piston rod is dependent on the hydraulic pressure and the pistons velocity. The minimum drilling should be 13 mm. Do not exceed the peak pressure.
- The measuring rod should be protected against wear.

Mounting Ring Manget

Mount the magnetic with the non-magnetic material for entrainment, screws, spacers, etc.

Mounting Example Fitting Flange »S« and Sensor Electronics with Bottom Cable Entry

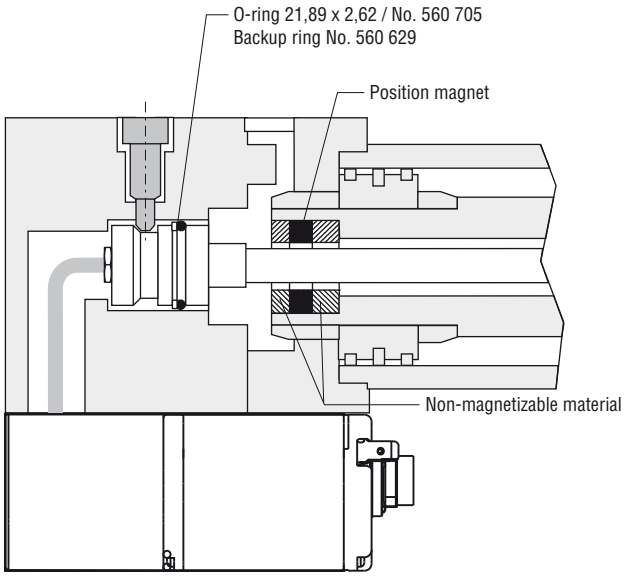

Bore in cylinder Ø 13-17 mm to push single wires with flat connector through.

Minimum Installation Dimensions for Magnetisable Material

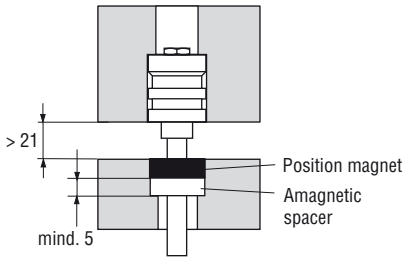

Selection of Position Magnets (not on delivery, please order separatly)

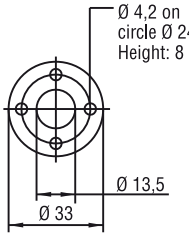

Ring magnet OD33
Part No. 201 542-2

Composite PA-Ferrite-GF20
Weigth ca. 14 g
Operating temperature:
-40 ... +100°C
Surface pressure max. 40 N/mm²
Fastening Torque for M4 screws max. 1 Nm

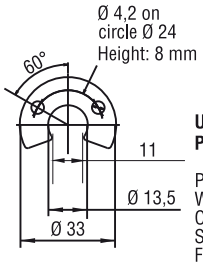

U-Magnet OD33
Part No. 251 416-2

PA-Ferrit-GF20
Weigth ca. 11 g
Operating temperature: -40 ... +100°C
Surface pressure max. 40 N/mm²
Fastening torque for M4 screws max. 1 Nm

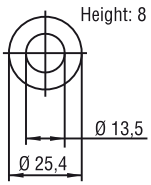

Ring magnet OD25,4
Part No. 400 533

Composite: PA-Ferrite
Weigth ca. 10 g
Operating temperature:
-40 ... +100°C
Surface pressure max.
40 N/mm²

All dimensions in mm

Standard position magnet not on delivery (see chapter Accessories)

Position magnets
Ring magnet OD33 (Part No. 201 542-2)
Ring magnet OD25,4 (Part No. 400 533)
U-Magnet OD33 (Part No. 251 416-2)

Connection types
Connector or cable outlet output dependent

Mounting Example Fitting Flange »S« and Sensor Electronics with Side Cable Entry

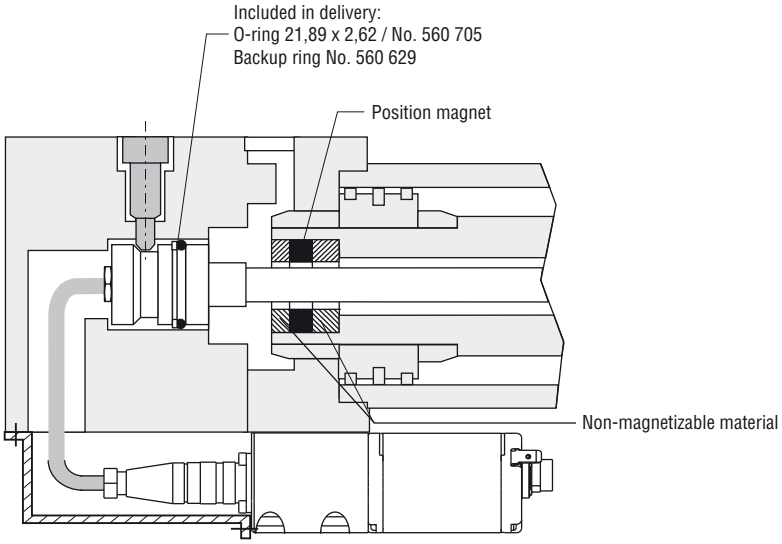

Mounting Detail: Setscrew 8 M6 - ISO7379 with internal Hexagon

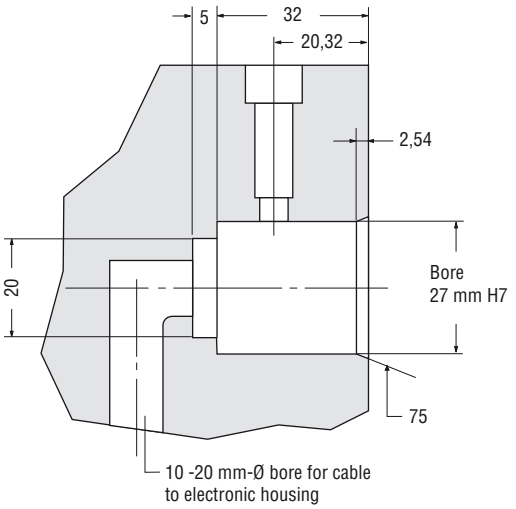

Detail: Fitting Flange

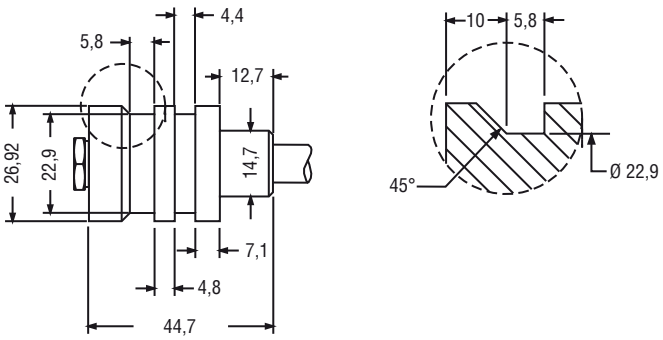

ATTENTION
To fulfill the EMC standards for emission and susceptibility the electronic housing has to be connected to machine ground.

All dimensions in mm

Sensor Installation with Fitting Flange »M« and »C«

Rod

The sensor's pipe will be fixed via the threaded flange M18 x 1.5. Mounting should be with non-magnetisable material. If using magnetisable material please necessarily follow the displayed installation dimensions.

Cylinder mounting

- The position magnet should not grind over the measuring rod.
- The bore in the piston rod is dependent on the hydraulic pressure and the pistons velocity. The minimum drilling should be 10 mm. Do not exceed the peak pressure.
- The measuring rod should be protected against wear.
- Pressure sealing definite by cylinder manufacturer

Mounting Example Fitting Flange »M«

Sealing results from the provided O-Ring 15.3 x 2.2 mounted in the undercut.

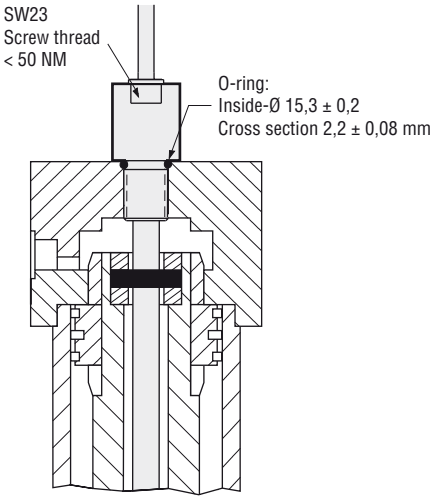

Detail screwing bore

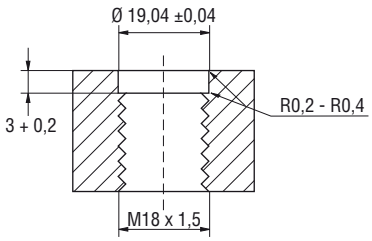

Alternative screwing bore:
See ISO 6149-1

Mounting Example Fitting Flange »C«

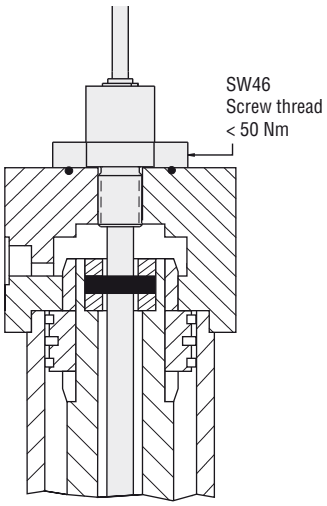

Hydraulic sealing

Recommanded is a sealing of the flange facing with O-Ring (e.g. 21.89 x 2.62) in a cylinder cover nut or an O-Ring in undercut.

Position Magnet

For accurate position measurement mount the magnet with non-magnetisable fastening material (screws, supports etc.).

Non-magnetisable material

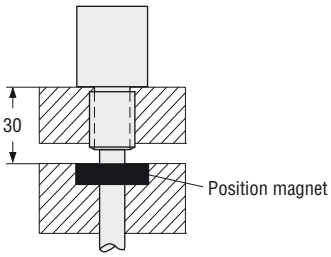

Magnetisable material

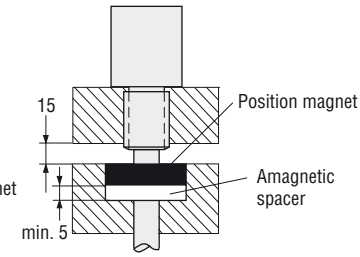

All dimensions in mm

Temposonics® RD4

R D 4 ☐ ☐ ☐ ☐ ☐ ☐ ☐ ☐ M ...

Sensor rod style

S - Fitting flange
M - Threaded flange M18 x 1.5, HEX23
C - Threaded flange M18 x 1.5, HEX46

Integral cable of sensor rod

For side cable entry:
D1 - PUR-cable, length 250 mm
D2 - PUR-cable, length 400 mm
D3 - PUR-cable, length 600 mm
For bottom cable entry:
R2 - Single wires with flat connector, length 65 mm
R4 - Single wires with flat connector, length 170 mm
R5 - Single wires with flat connector, length 230 mm
R6 - Single wires with flat connector, length 350 mm

Sensor electronics

S - Side cable entry
B - Bottom cable entry

Measuring length

Flansch M,C: 0025 ... 5000 mm
Flansch S: 0025 ... 2540 mm
Standard: See chart

Further parameter

See data sheets R-Series according to the required output
Analog / SSI / CANbus / Profibus / EtherCAT

Magnets and Accessories must be ordered separately.

Description	**Part No.**
Ring magnet OD33, standard	201 542-2
U-Magnet OD33	251 416-2
Ring magnet OD 25.4 mm	400 533
Ring magnet OD 17.4 mm	253 572
Connectors and cables see data sheet R-Series	
Spare Parts	
O-Ring 15.3 x 2.2 FPM 75	401 133
O-Ring 21.89 x 2.62 PFPM 75	560 705
Backup ring	560 629
O-Ring 20 x 2.65 FPM 80	561 435

Stroke Length Standard RD4	
Stroke Length	**Ordering Steps**
< 500 mm	5 mm
500 - 750 mm	10 mm
750 - 1000 mm	25 mm
1000-2500 mm	50 mm
> 2500 mm	100 mm

Temposonics®

Absolute, Non-Contact Position Sensors

R-Series
Rod Model RS

Temposonics®-RS
Measuring range 50 - 7600 mm

Position Sensor with IP69K Super Shield Housing

- **Rugged Industrial Sensor**
- **Linear and Absolute Measurement**
- **Contactless Sensing with Highest Durability**
- **Analog / SSI / CANbus / DeviceNet / Profibus / EtherCAT**
- **Sealed IP68 / IP69K**

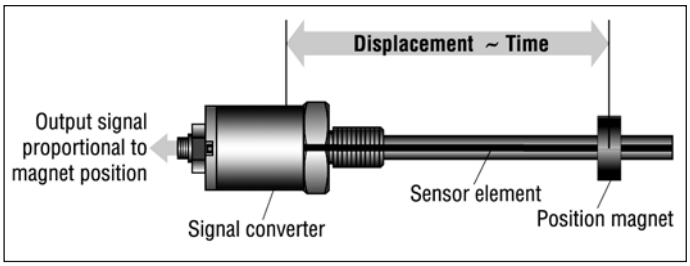

The extremely robust **Temposonics® RS** sensor with super shield housing ensures long-term linear position measurement in the harshest environments. Hermetically sealed with a housing completely made of stainless steel, it meets the requirements of protection modes IP68 and IP69K and are reliably shielded against corrosion and penetration of dirt and water.

Due to non-contact measuring technology, sensor integration into a hermetically sealed housing is possible. A position magnet moves along the outside of the pressure-resistant sensor pipe and marks the position without mechanical contact. For level measurement, an optional float can be used. The modular sensor cartridge design enables the customer to choose the specific sensor output configurations to be installed within the super shield housing to best fit their application requirements. The measuring accuracy and all technical data correspond to the features of the sensor selected inside the housing. A wide choice of interfaces (Analog, Profibus, SSI, CANbus, DeviceNet, EtherCAT, POWERLINK) is available. Moreover, integration of ATEX-certified and intrinsically safe sensors is possible with the protective housing.

Temposonics®-RS sensors are made to fit Temposonics® R-Series with analog and digital outputs. Fixed cable and connector versions can be used on the sensor side. When using standard sensors in this housing, you get a cost efficient solution for use in rugged applications.
Several design combinations are available to fit your application: M18 or 3/4"UNF mounting flange thread, various housing length, and single, dual or triple cable glands.

Technical Data (depending on selected interface)

Input	
Measuring range	50 - 7.600 mm
Output	
Interfaces	Analog, SSI, CANbus, DeviceNet, Profibus, EtherCAT, POWERLINK
Operating conditions	
Dew point, humidity	100% rel. humidity
Protection	IP68 / IP69K
Design, Material	
Sensor head	303/304 Stainless steel 316L (1.4404) on request
Sensor stroke	303/304 (1.4305) Stainless steel 316L on request
Pressure rating	350 bar, 700 bar peak
Position magnet	Ring magnet or magnet float
Installation	
Mounting position	Any orientation
Torque moment	< 50 Nm
Rod	Threaded flange M18 x 1,5
	or 3/4"-16 UNF-3A, Hex nut M18
Electrical connection	
Connection type	Integral cable pigtail termination

Info:
For detailed technical data and electrical connection for the outputs please see data sheets:
R-Series Analog, SSI, CANbus, DeviceNet, Profibus, EtherCAT.

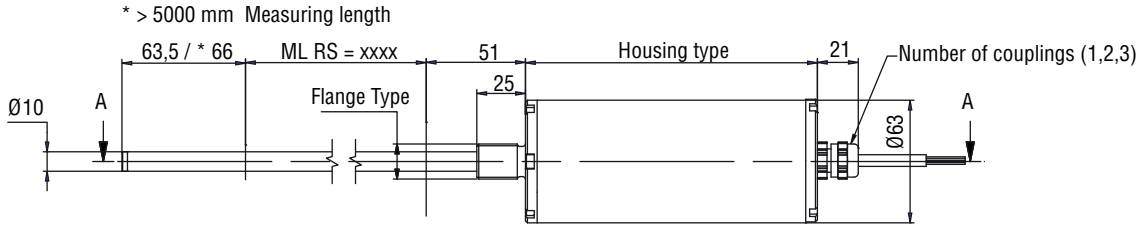

Type 1 Cable outlet
Housing type 1 = 150

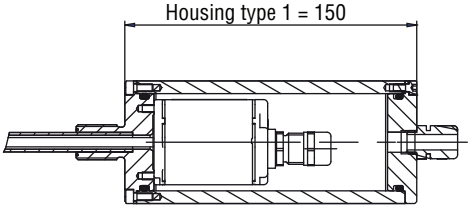

Type 2 Housing short
Housing type 2 = 170

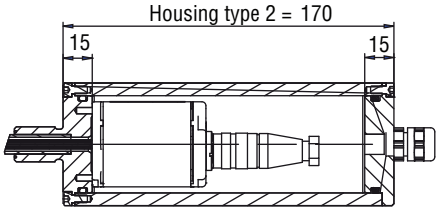

Type 3 Housing long
Housing type 3 = 190

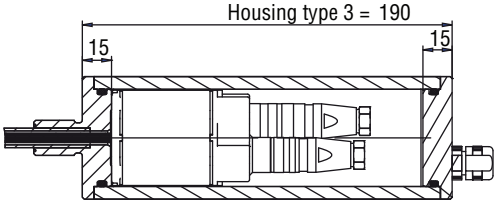

Lids according to the outputs.

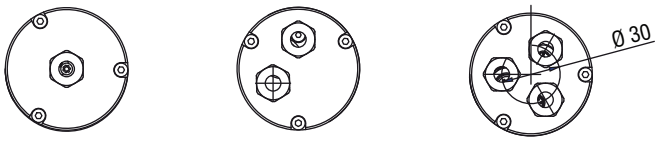

Please use a standard strap wrench to mount the sensor.

Temposonics® R S M ...

Model
RS - Super Shield Sensor

Design
M – Flange M18x1,5
S – Flange ¾“ – 16 UNF – 3A

Measuring range
0050...7600 mm
Standard: See chart

Further parameter
See data sheets R-Series according to the required output
Analog / SSI / CANbus / Profibus / EtherCAT

Magnets and Accessories must be ordered separately.

Accessories	**Part No.**
Ring magnet OD33, Standard	201 542-2
U-Magnet OD33	251 416-2
Ring magnet OD30,5	402 316
Position magnet 70x37,5	252 185
Block magnet	403 448

Stroke Length Standard RH	
Stroke Length	**Ordering Steps**
< 500 mm	5 mm
500 - 750 mm	10 mm
750 - 1000 mm	25 mm
1000-2500 mm	50 mm
2500 - 5000 mm	100 mm
> 5000 mm	250 mm

Temposonics®

Absolute, Non-Contact Position Sensors

Accessories

- Position Magnets
- Floats
- Connectors
- Clamps
- Cables
- Programming Tools
- High Pressure Housing, …

ACCESSORIES R-SERIES

Position Magnets, Floats, Connectors, Clamps, Cables and Programming Tools

Product	Dimension	Material	Application
 **Standard magnet** Ring magnet OD33 **Part No. 201 542-2**	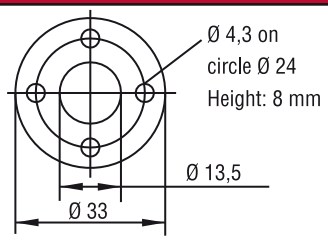	Composite PA-Ferrite-GF20 Weight ca. 14 g Operating temperature: -40 ... +100°C Surface pressure max. 40 N/mm² Fastening Torque for M4 screws max. 1 Nm	RH, RF, RD4 marked version for sensors with linearity correction option (LCO): **Part No. 253 620**
 **Standard magnet** U-magnet OD33 **Part No. 251 416-2**	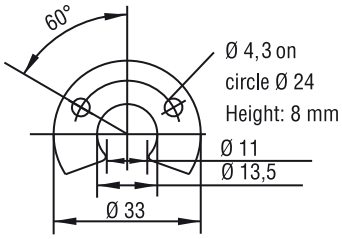	Composite PA-Ferrite-GF20 Weight ca. 11 g Operating temperature: -40 ... +100°C Surface pressure max. 40 N/mm²	RH, RF, RP marked version for sensors with linearity correction option (LCO): **Part No. 254 226**
 U-magnet OD63,5 **Part No. 201 553**	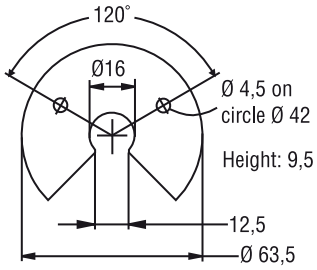	PA 66-GF30 Magnets compound-filled Weight ca. 26 g Operating temperature: -40 ... +75°C	RH, RF, RP
 Ring magnet OD25,4 **Part No. 400 533**	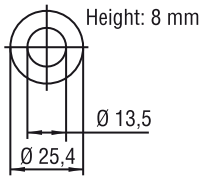	Composite: PA-Ferrite Weight ca. 10 g Operating temperature: -40 ... +100°C Surface pressure max. 40 N/mm²	RH, RF, RD4 marked version for sensors with linearity correction option (LCO): **Part No. 253 621**
 Ring magnet OD30,5 **Part No. 402 316**	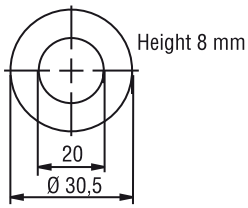	Composite: PA-Ferrite Weight ca. 15 g Operating temperature: -40 ... +100°C Surface pressure max. 40 N/mm²	RH, RF, RD4
 Ring magnet **Part No. 401 032**	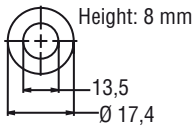	PA-Neonbond compound Weight ca. 5 g Operating temperature: -40 ... +100 Surface Pressure max. 20 N/mm²	RH, RD4 (not for multi-position measurement)
 Ring magnet OD60 **Part No. MT 0162**	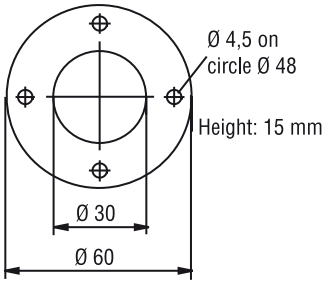	Al CuMgPb Magnets compound-filled Weight ca. 90 g Operating temperature: -40 ... +75°C	RH, RF, RD4

Notice: More magnets available on request. Product pictures may vary from original.

ACCESSORIES R-SERIES

Position Magnets, Floats, Connectors, Clamps, Cables and Programming Tools

Product	Dimension	Material	Application
 U-magnet 70 **Part No. 252 185**	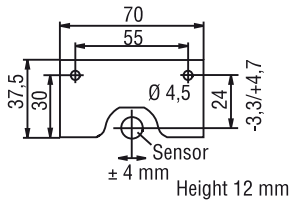	AlMg4.5Mn, black anodised Magnets compound-filled Weight ca. 75 g Operating temperature: -40...+75°C	RH, RF, RP Resolution min. 10 µm
 Magnet slider V **Part No. 252 184**	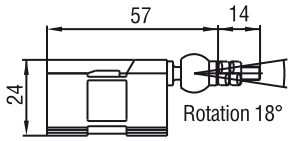	GFK, Magnet Hardferrite Weight ca. 30 g Operating temperature: -40 ... +75°C	RP
 Magnet slider S Magnet slider G **Part No. 252 182 Part No. 253 421**	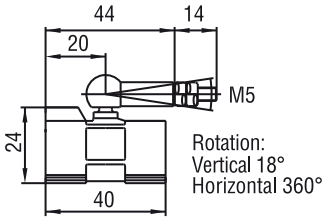	GFK, Magnet Hardferrite Weight ca. 30 g Operating temperature: -40 ... +75°C **Magnet slider S:** Ball joint CuZn 39Pb3 nickel plated **Magnet slider G - free from float:** Socket joint, high-strength plastics Ball joint CuZn39Pb3 nickel plated	RP
 Magnet slider P **Part No. 253 673**	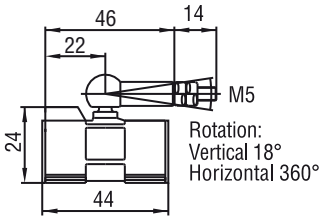	GFK, Magnet Hardferrite Weight ca. 30 g Operating temperature: -40 ... +75°C with additional end plates	RP
 Block magnet **Part No. 403 448**	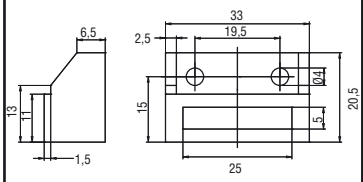	Weight: ca. 20 g Operating temperature: -40...+75°C	RH, RF, RP Resolution min. 10 µm
 Float 50 mm **Part No. 251 447**	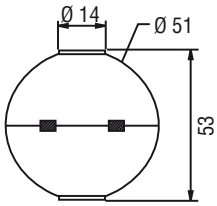	1.4571 Stainless steel Density: 720 kg/m³ Max. Pressure: < 40 bar Weight: 42 ± 3 g	RH, RF
 Float 41 mm **Part No. 200 938-2**	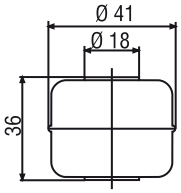	1.4404 Stainless steel Density: 740 kg/m³ Max. Pressure: =< 8 bar Weight: 20 ± 2 g	RH, RF
 Collar **Part No. 560 777**	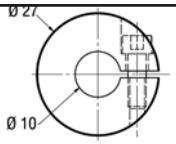	1.4301 Stainless steel	RH

Notice: Product pictures may vary from original.

ACCESSORIES R-SERIES

Position Magnets, Floats, Connectors, Clamps, Cables and Programming Tools

Product	Dimension	Material	Application
 6 pin Connector (for cable Ø 6 mm) **Part No. 370 623 (female)** For cable Ø 6-8 mm **Part No. 370 423**	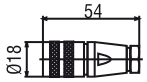	Housing: Zinc nickel plated Termination: Solder Contact insert: Silver plated Max. Cable-Ø 6 mm or Ø 8 mm depending on design	Analog CAN
 6 pin Connector M16, 90° **Part No. 560 778 (female)**	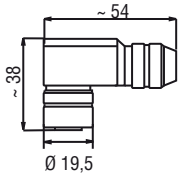	Housing: Zinc nickel plated Termination: Solder Contact insert: Silver plated Max. Cable-Ø 8 mm	Analog CAN
 5 pin connector, M12x1 **Part No. 370 618 (female)**	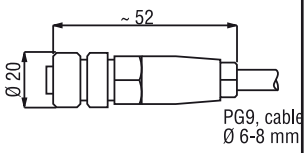	Housing: PA Termination: Screws clamp Contact insert: (CuZn/Sn) Max. Cable-Ø 6-8 mm	CAN
 5 pin connector, M12x1, 90° **Part No. 370 619 (female)**	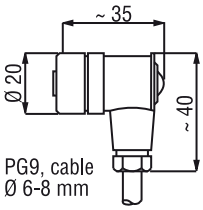	Housing: PA Termination: Screws clamp Contact insert: (CuZn/Sn) Max. Cable-Ø 6-8 mm	CAN
 7 pin Connector, M16 **Part No. 370 624 (female)**	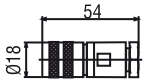	Housing: Zinc nickel plated Termination: Solder Contact insert: Silver plated Cable clamp: PG9 Max. Cable-Ø 8 mm	SSI
 7 pin Connector, M16, 90° **Part No. 560 779 (female)**	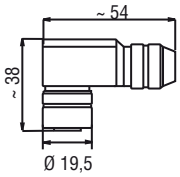	Housing: Zinc nickel plated Termination: Solder Contact insert: Silver plated Max. Cable-Ø 8 mm	SSI
 6 pin Connector, M16 **Part No. 370 423 (female)** **Part No. 370 427 (male)**	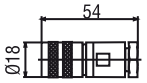	Housing: Zinc nickel plated Termination: Solder Contact insert: Silver plated Cable clamp: PG9	Profibus (D63)

Notice: Product pictures may vary from original.

ACCESSORIES R-SERIES

Position Magnets, Floats, Connectors, Clamps, Cables and Programming Tools

Product	Dimension	Material	Application
 6 pin Bus endplug M16, male **Part No. 370 620**	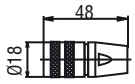	Housing: Zinc nickel plated Contact insert: Silver plated	Profibus (D63)
 5 pin connector M12-B **Part No. 560 885 (female)**	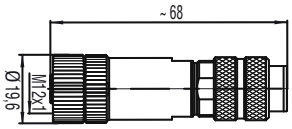	Housing: Zinc nickel plated Termination: spring-type terminal Contact insert: Silver plated Cable-Ø: 6,5 - 8,5 mm	Profibus (D53)
 5 pin 90° connector M12-B **Part No. 370 514 (female)**	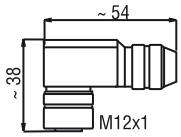	Housing: Zinc nickel plated Termination: spring-type terminal Contact insert: Silver plated Cable-Ø: 6,5 - 8,5 mm	Profibus (D53)
 5 pin connector M12-B **Part No. 560 884 (male)**	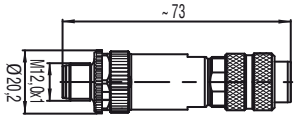	Housing: Zinc nickel plated Termination: Srews clamp Contact insert: Silver plated Cable-Ø: 6,5 - 8,5 mm	Profibus (D53)
 5 pin 90° connector M12-B **Part No. 370 515 (male)**	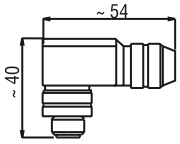	Housing: Zinc nickel plated Termination: Srews clamp Contact insert: Silver plated Cable clamp: M16 Cable-Ø: 6,5 - 8,5 mm Cable type e.g.: K25	Profibus (D53)
 5 pin Bus T-connector M12 **Part No. 560 887**	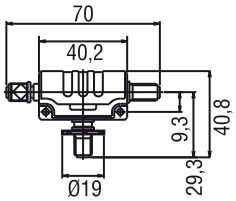	Housing: PA 66 Contact insert: Silver plated	Profibus (D53)
 5 pin Bus endplug M12 **Part No. 560 888**	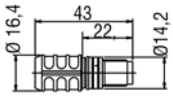	Housing: PA 66 Contact insert: Silver plated	Profibus (D53)

Notice: Product pictures may vary from original.

ACCESSORIES R-SERIES

Position Magnets, Floats, Connectors, Clamps, Cables and Programming Tools

Product	Dimension	Material	Application
 4 pin cable connector M8 **Part No. 370 504**	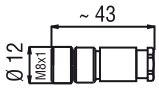	Housing: Brass nickel plated Termination: Solder Contact insert: Au Max. Cable-Ø 5 mm	Profibus (D53) EtherCAT CAN (D54)
 4 pin cable connector M8, 90° **Part No. 560 886**	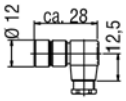	Housing: PA 66 Termination: Solder Contact insert: Au Max. Cable-Ø 5 mm	Profibus (D53) EtherCAT CAN (D54)
 Cable connector **Part No. 530 066** **Part No. 530 096** **Part No. 530 093**	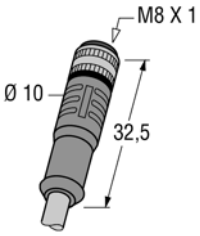	PUR-cable with 4 pin. female connector 5 m length free end 4 x 0,25 mm², shielded for 24 V power supply **Part No. 530 066** = 5 m length **Part No. 530 096** = 10 m lengt **Part No. 530 093** = 15 m length	Profibus (D53) EtherCAT CAN (D54)
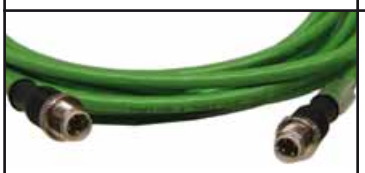 Cable connector **Part No. 530 064**	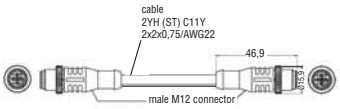	5 m industrial Ethernet cable (Cat 5e ES) w/2x4 pin M12-connectors (D-coded) PUR-jacket, green	EtherCAT
 Cable connector **Part No. 530 065**	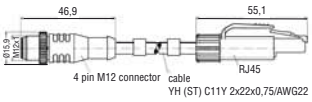	5 m industrial Ethernet cable (Cat 5e ES) RJ45 connector and M12-connector (D-coded) PUR-jacket, green	EtherCAT
 4 pin Bus cable connector **Part No. 370 523**	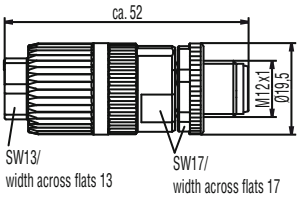	IDC technology	EtherCAT
 End cap **Part No. 370 537**		Aluminum	EtherCAT

Notice: Product pictures may vary from original.

ACCESSORIES R-SERIES

Position Magnets, Floats, Connectors, Clamps, Cables and Programming Tools

Product	Dimension	Material	Application
 Clamp **Part No. 400 802**	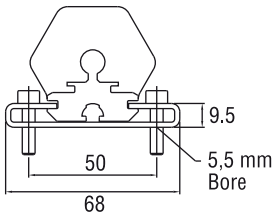	Stainless steel	RP
 T-Nut **Part No. 401 602**	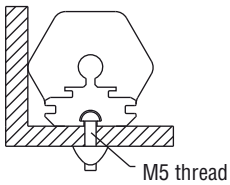	Stainless steel	RP
 Spacer **Part No. 400 633**	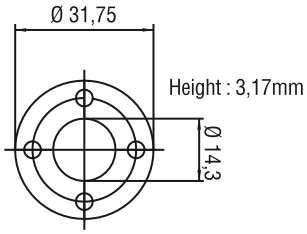	Aluminum	RH
 Fixing clip **Part No. MT 0200**	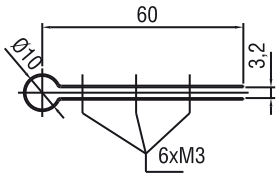	Brass Flat section and fastening screws: non-magnetic material	RH
 Metal protection cap for connector M16 **Part No. 403 290**			Analog, CAN, SSI, Profibus
 Hex nut **Part No. 500 018**		Edelstahl	RH-M
 O-ring **Part No. 401 133**	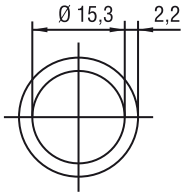	Fluorelastomer FPM 75 Operating temperature: -10...+125°C	RH-M
 Cable **Part No. 530 032**	3 x 2 x 0,14 mm² Ø 6 mm	PVC -10 ... +80°C	Standard

Notice: Product pictures may vary from original.

ACCESSORIES R-SERIES

Position Magnets, Floats, Connectors, Clamps, Cables and Programming Tools

Product	Dimension	Material	Application
 Cable **Part No. 530 052**	3 x 2 x 0,25 mm Ø 6,8 mm	Pelon PUR -40 ... +80°C	Halogen free Oil-resistant High flexible
 Cable **Part No. 530 116**	4 x 2 x 0,25 mm²	PUR (-30 ... +90°C)	Water proof wires
 Cable **Part No. 530 112**	4 x 2 x 0,25 mm²	Teflon (-90 ... +180°C)	Temperature
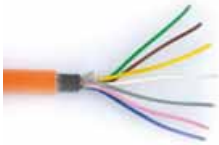 Cable **Part No. 530 029**	7 x 0,14 mm² EMC protected Ø 7 mm	PUR -20 ...+70°C	SSI, CAN
 Cable **Part No. 530 040**	BUS + feed-in Ø 8 mm	PVC -30 ... +80°C	Profibus-DP D63
 Cable **Part No.530 109**	BUS conductor, high flexible cable Ø 8 mm	PUR -30 ... +70°C	Profibus-DP D53

Product	Description
 Hand-Programmer R-Analog **Part No. 253 124**	**Hand-Programmer R-Analog for 1-Magnet Sensor** is for easy teach-in-setups of measuring length and direction on desired Zero/Span positions.

Notice: Product pictures may vary from original.

ACCESSORIES R-SERIES

Position Magnets, Floats, Connectors, Clamps, Cables and Programming Tools

Product	Description
 Cabinet-Programmer **Part No. 253 408**	**Cabinet-Programmer R-Analog** Cabinet-Programmer R-Analog completes the accessories program of MTS absolute position sensors. The unit can be used for adjusting a connected 1-magnet sensor via the leads, using a simple teach-in procedure in the field.
 USB-Programmer R-Analog **Part No. 253 134-1**	**USB-Programmer R-Analog for 1 or 2-Magnets Sensor (incl. Power supply, USB-Cable, Sensor-Cable and CD-ROM)** for setting and reading of position and output values by using a PC for - Zero/Span Magnet 1 - Zero/Span Magnet 2 - Velocity range - Free assignment of outputs to measured position or velocity - Error output value (e.g. magnet out of stroke)
 USB-Programmer R-SSI **Part No. 253 135-1**	**USB-Programmer R-SSI (incl. Power supply, USB-Cable, Sensor-Cable and CD-ROM)** for setting and reading of - Data length - Data format - Resolution - Measuring direction - Synchronous / asynchronous measurement - Offset, begin of the measurement range - Alarm value (Magnet outsite) - Measurement filter - Differential measurement
 Profibus Address-Programmer Kit for D63, D53 or cable connector **Part No. 280 640**	**PROFIBUS Address Programmer** is used for setting the slave address to Temposonics® sensors with Profibus-DP Interface. The setup of slave address normally is done by the profibus standard service **SetSlaveAddress.** Since some master systems do not support this standard, or the customer controller system can not handle it, this MTS service tool can be used for the direct setup of the sensor. The programmer and the sensor will be supplied by the included power supply.

Notice: Product pictures may vary from original.

ACCESSORIES R-SERIES

Position Magnets, Floats, Connectors, Clamps, Cables and Programming Tools

Product	Description
 CANopen Address-Programmer D62 6 pin. female connector M 16 **Part No. 252 382-D62** 6 pin female 90°-connector M16 **Part No. 252 382-D62A**	**CANopen Address Programmer** is used for setting the Node-Address to Temposonics® sensors with CANopen Interface. The setup of Node-Address normally is done by the CAN Bus standard **LMT-Service.** Since some master systems do not support this standard, or the customer controller system can not handle it, this MTS service tool can be used for the direct setup of the sensor. All you need for using the programmer is a 24 VDC power supply to the sensor. The programming tool will be supplied from the Temposonics® position sensor.
 Profibus Master Simulator **Part No. 401 727**	**PROFIBUS Master Simulator** The Master Simulator can be used to check the sensors functions and to change the slave address. The magnet positions can be read out and the diagnostic data as well. Cable D 53 **Part No. 252 383** Cable D63 **Part No. 401 726**
 Display and control unit with SSi input **Part No. IX 345**	Housing: 96 x 48 x 141 m Cutout: 91 x 44 mm 6-segment LED Display for SSI
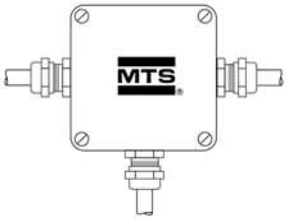 Profibus Filter box **Part No. 252 916**	Housing: 80 x 75 x 58 mm The box is used for EMC-conformal feeding of 24 VDC supply voltage into the Profibus-DP hybrid cable.
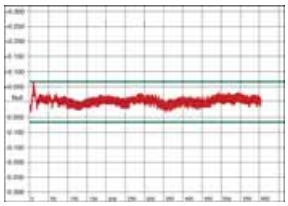 Linearity diagram **Part No. 625 096**	DIN A 4 printout with sensor data and graphic with the linearity gradient Printout with linearity gradient from the sensor. This gradient can be used to choose a special linear segment also for linearity correcture in sections.

Notice: Product pictures may vary from original.

ACCESSORIES R-SERIES

ATEX [ATmosphere EXplosive]

Approved Sensors: R-Series

- Analog Output
- CAN Bus [All Versions]
- SSI Output

Note: 1. All products are available in Profile and Rod Version.
2. Signal dependent selectable with PUR, PVC or Teflon cable.

ATEX Conformity: Marking on MTS Approved Sensor

Ex II 3G Ex nA II T4
and/or
Ex II 3D tD A22 IP67 T100°C
TFR: 07 ATEX 027
-20°C ≤ Ta ≤ 75°C
Pmax = 4 Watt
Derated 6,5 K/W ≥ 49°C

Applicable ATEX Regulations / Directives

Directive 94/9/EG ('Manufacturers Directive')
Sets out directives for equipment manufacturers that are used in potentially explosive atmospheres.
Related Norms:
EN 60079-0:2006, EN 60079-15:2005
EN 61241-0:2006, EN 61241 - 1:2004

MTS is a certified supplier for displacement sensors intended to be used in hazardous areas of the Category 3 according to the ATEX standard.

a. In Zone 2 (Gas, Category 3G) in the explosion groups IIA, IIB, IIC.
b. In Zone 22 (Dust, Category 3D) at dusts with a minimum ignition energy of > 3 mJ.

Ordering Code

Temposonics® R ☐ ☐☐☐☐ M ☐☐☐ 1 ☐☐☐ E X

Model
RP- Profile
RH - Rod

Measuring Length in mm
Profile - 0050...5000 mm
Rod - 0050...7600 mm
Standard: up to 1000 in 50 mm steps, greater 1000 in 250 mm steps
Other length upon request.

Connection type:
R02 - 2 m PVC cable w/o connector, Option: R01-R10 (1-10 m)
P02 - 2 m PUR cable w/o connector, Option: P01-P10 (1-10 m)
T02 - 2 m Teflon cable w/o connector, Option: T01-T10 (1-10 m)
Note: This options are output signal dependent.
For details refer individual catalog section.

Output
Analog / CANbus / SSI

Approved Versions
ATEX

ACCESSORIES R-SERIES

Precision Position Measurement High Pressure Housing

This **H**igh **P**ressure **H**ousing is **ATEX EEx approved** and **UL and cUL** approved for use in **hazardous locations** with Temposonics® position sensors.

The ATEX, UL and cUL approvals cover flammable gases, vapors and liquids.

This housing is made to fit Temposonics® R-Series sensors with analog and digital outputs. Both fixed cable and connector versions can be used. When using a standard sensor in this housing you get a cost efficient solution for use in hazardous locations which also allows easy sensor replacement.
Several design combinations are available to fit your application:
M18 or 3/4"UNF Mounting flange thread - M20 or 1/2" NPT Cable gland thread - long or short - top-mounted, side-mounted, or dual side-mounted cable glands. See Combination Chart.

All parts are made of 316L Stainless steel. The housing is also available in non-approved versions ensuring an outstanding protection to the sensor when used in rugged applications with high humidity and aggressive gases.

Protection Type:	
ATEX:	II 2 G Ex d IIC T5 T_{amb} -40°C to +60°C II 2 D Ex tD 20/A21 IP68 T 100°C ITS09ATEX16296X In accordance with EN 60079-0:2006 EN 60079-1:2007, EN 60079-26:2004, EN 60079-0:2006 and EN 61241-1:2004 Only with ATEX approved cable glands
	Class 1, Devision 1, Groups A, B, C, and D hazardous locations, temperature code T5 As to fire, electrical shock and explosion hazards only UL certificate no. 2PD0. In accordance with UL 1203 standard. Only with UL approved cable glands
Material:	Stainless Steel AISI 316L (1.4404)
Cable Gland Threads:	M20 x 1,5 or 1/2" NPT
Ingress protection code:	IP68 (only with IP68 approved cable gland)
Approved sensors:	G-Series Analog + Digital L-Series Start / Stop R-Series Analog R-Series Profibus R-Series CANBUS R-Series SSI R-Series DeviceNet
Mounting Flange:	M18 x 1,5 or 3/4" - 16UNF - 3A
Pressure rating:	350 Bar continuous
Peak pressure:	530 Bar
Magnet type:	Ring magnets see page 58
Level Measurement:	Float on request

Top mounted cable gland

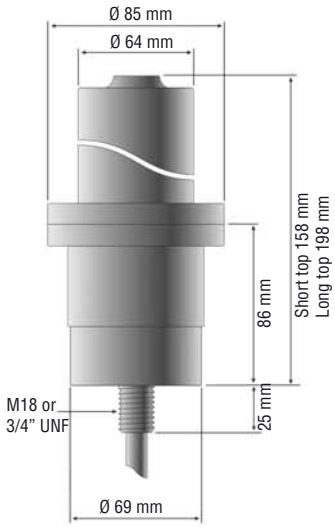

Side mounted cable gland

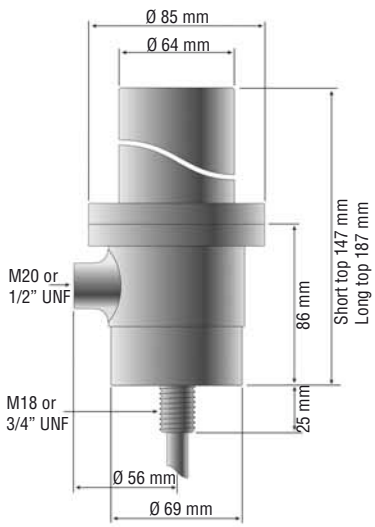

ACCESSORIES R-SERIES

Precision Position Measurement High Pressure Housing

Combination Chart:

Bottom / Top	M 18	M 20 / M 18	1/2" NPT / 3/4" UNF	1/2" NPT / 3/4" UNF	M20 / M 20 / M 18
Approval	**ATEX**	**ATEX**	**ATEX**	**UL and cUL**	**ATEX**
M 20	**0100**				
		0900	**1000 ATEX**	**1000 UL/cUL**	**1300**
M 20	**0300**				
		1700			**2100**

The long top is needed for Profibus sensors

Ordering Information:

Part-No. HPH -XXXX-XXXX-X-XXXXXX

Choose a design combination from the chart

Measuring length 50 - 7600 mm

Approved or Non-approved version

Only for version 1000: Please add type of approval:
- ATEX
- UL/cUL

Example: Approved short housing with M18 mounting threads and one side mounted cable gland with M20 threads and a measuring length of 650 mm:
HPH-0900-0650-A

Note!
Accessories see data sheet "High Pressure Housing"
Order separately: Sensor R-Series RH-B...
B = Basic version without hydraulic rod

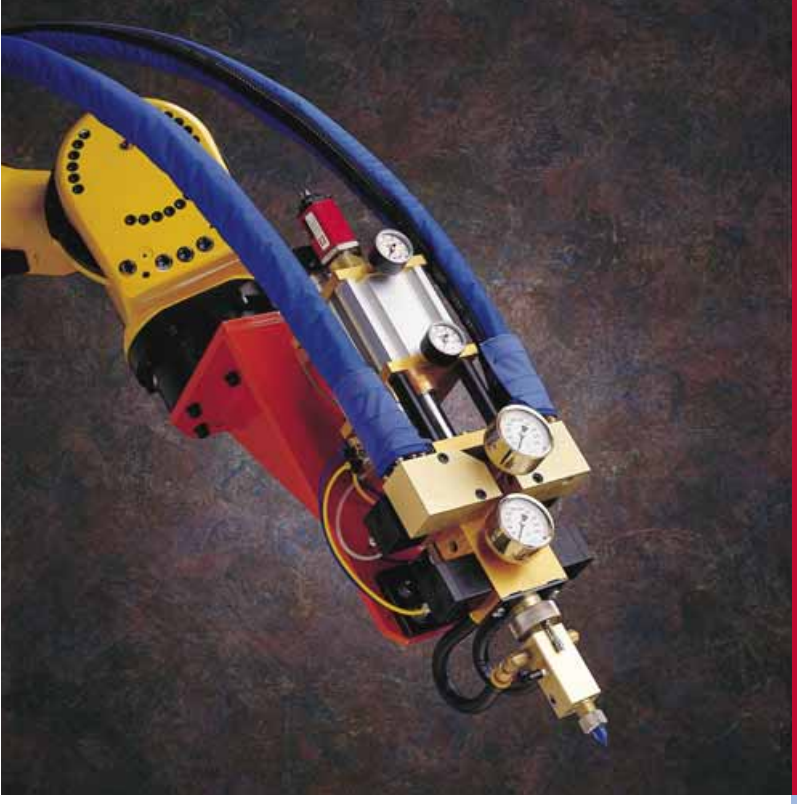

IMAGINE…minimum size of gluing points, exact mixing ratios, filigree finishing. A sensor ensures high-accuracy dosing due to continuous measurement of the flow quantity and speed.

OUR TARGET? YOUR SATISFACTION!

A convincing product always requires a brilliant service. For MTS, the customer's full satisfaction is the uppermost target of our ideas and activities. Excellent technical support is provided by the Application Service Group. Our application engineers expertise, extensive know-how and outstanding knowledge of the branch are available to assist you optimally already during planning. After buying MTS sensors, you can count on the top-class after sales service of the market leader. Whenever necessary, on-site advice by the experienced technicians and engineers is available to you.

Regular courses are held by MTS for optimum training of your operating personnel. At MTS, customer orientation is more than a slogan.

- **Hotline-Service:** **0049 160 901 349 00**
  Mo.-Fr. 8:00 am - 7:00 pm
  Sa. 8:00 am -12:00 pm
- **Online product configurator** for 2D/3D drawings (login-area)
- Always up-to-date with the **MTS E-Newsletter**
- **24h online shop:** www.temposonics-shop.de

MTS Sensors Sales Organisation

MTS SENSORS (Worldwide)

Germany
MTS Sensor Technologie GmbH & Co. KG
Auf dem Schüffel 9
58513 Lüdenscheid
Germany
Tel.: +49 23 51 95 87 0
Fax: +49 23 51 56 49 1
eMail: info@mtssensor.de
http://www.mtssensor.de

USA
MTS Systems Corporation
Sensors Division
3001 Sheldon Drive
Cary, NC 27513
USA
Tel: +1 919 677 0100
Fax: +1 919 677 0200
eMail: sensorsinfo@mts.com
http://www.mtssensors.com

Japan
MTS Sensors Technology Corp.
737 Aihara-cho,
Machida-shi
Tokyo 194-0211
Japan
Tel.: +81 42 775 3838
Fax: +81 42 775 5516
eMail: info@mtssensor.co.jp
http://www.mtssensor.co.jp

BRANCH OFFICES (Worldwide)

France
MTS Systems SAS
Zone EUROPARC
Bâtiment EXA 16
16/18, rue Eugène Dupuis
94046 Creteil
France
Tel.: +33 1 58 43 90 28
Fax: +33 1 58 43 90 03
eMail: MTSsensor.France@mts.com

Italy
MTS Systems Srl.
Sensor Division
Via Diaz,4
25050 Provaglio d'Iseo (Bs)
Italy
Tel.: +39 030 988 38 19
Fax: +39 030 982 33 59
eMail: mtssenstechitalia@tin.it

China
MTS Sensors
No. 481, Guiping Road, Building #23
Shanghai, 200233
P.R.China
Tel: +86 21 6485 5800
Fax: +86 21 6495 6329
eMail: info@mtssensors.cn
http://www.mtssensors.cn

DISTRIBUTORS (Europe, Mideast, India, Africa)

Austria
Leotec - Sensorik GmbH Co KG
Neubauzeile 101
4030 Linz
Austria
Tel.: +43 732 77 48 48 0
Fax: +43 732 77 48 48 9
eMail: office@leotec.at
http://www.leotec.at
Contact: Ing. Christoph Haginger

Belgium
Multiprox N.V.
Lion d`Orweg 12
9300 Aalst
Belgium
Tel.: +32 53 766 566
Fax: +32 53 783 977
eMail: mail@multiprox.be
http://www.multiprox.be
Contact: Mr. Hans De Craemer

Czech Republic
Alpha International spol.s.r.o.
Fantova 342
38241 Kaplice
Czech Republic
Tel: +420 380 311 203
Fax: +420 380 311 018
eMail: info@alphaint.cz
http://www.alphaint.cz
Contact: Mrs. Machackova

Denmark
Summit Electronics ApS
Stamholmen 147
2660 Hvidovre
Denmark
Tel.: +45 48 47 59 19
Fax: +45 48 48 48 81
eMail: ch@summit.dk
http://www.summit.dk
Contact: Mr. Carsten Holme

Finland
Sensorola Oy
Muuntotie 1
01510 Vantaa
Finland
Tel.: +358 207 289900
Fax: +358 207 289919
eMail: myynti@sensorola.fi
http://www.sensorola.fi
Contact: Mr. Kimmo Ikonen

Great Britain
R.D.P. Electronics Ltd.
Grove Street, Heath Town
Wolverhampton W V10 OPY
Great Britain
Tel.: +44 1902 45 75 12
Fax: +44 1902 45 20 00
eMail: sales@rdpe.com
http://www.rdpe.com
Contact: Mr. Peter Purdy

Hungary
Kvalix Automatika Kft.
IV. Kiss Ernö u. 3.
1046 Budapest
Hungary
Tel.: +36 (1) 272 2242
Fax: +36 (1) 272 2244
eMail: info@kvalix.hu
http://www.kvalix.hu
Contact: Mr. Péter Forró

India
Servocontrols & Hydraulics India Pvt Ltd
Servey No. 683, Industrial Estate
Udyamabag, Belgaum
Karnataka 590008
India
Tel: +91 831-2407501, -2407502,
-2407503, -2481734, -4201132
Fax: +91 831 2484496
eMail: sales@servocontrolsindia.com
http://www.servocontrolsindia.com
Contact: Mr. Deepak Dhadoti

Ireland
R.D.P. Electronics Ltd.
Grove Street, Heath Town
Wolverhampton W V10 OPY
Great Britain
Tel.: +44 19 02 45 75 12
Fax: +44 19 02 45 20 00
eMail: sales@rdpe.com
http://www.rdpe.com
Contact: Mr. Peter Purdy

Netherlands
tsb-bescom b.v.
Spoorallee 8
6921 HZ Duiven
Netherlands
Tel.: +31 316 250 800
Fax: +31 316 250 819
eMail: john.post@tsb-bescom.nl
http://www.tsb-bescom.nl
Contact: Mr. John Post

Norway
Semitronic AS
Grorudveien 55 D
0976 Oslo
Norway
Tel.: +47 21 37 87 20
Fax: +47 22 91 75 01
eMail: firmapost@semitronic.no
http://www.semitronic.no
Contact: Mr. Erik Nordby

Poland
Newtech Engineering Sp. z.o.o.
ul. Sowinskiego 3
44-100 Gliwice
Poland
Tel.: +48 032 2376198
Fax: +48 032 2376197
eMail: witold.nantka@newtech.com.pl
http://www.newtech.com.pl
Contact: Mr. Witold Nantka

Portugal
F. Fonseca, S.A.
Rua Joao Francisco do Casal 87/89
Esgueira
3801-997 Aveiro
Portugal
Tel.: +351 234 303 900
Fax: +351 234 303 910
eMail: hlemos@ffonseca.com
http://www.ffonseca.com
Contact: Mr. Helder Lemos

Romania
ROMSENZOR SRL.
Ritmului 4
Bl. 438 Sc. 2 Ap. 55
021677 Bucharest
Romania
Tel.: +40 21 2502719
Fax: +40 21 2504769
eMail: c.petcu@romsenzor.ro
http://www.romsenzor.ro
Contact: Mr. Constantin Petcu

Slovakia
EXIM - TECH, s.r.o.
Partizanska cesta 76
974 01 Banska Bystrica
Slovakia
Tel: +421 48 41 47 086
Fax: +421 48 470 08 99
eMail: eximtech@eximtech.sk
http://www.eximtech.sk
Contact: Mr. Pavel Filo

Slovenia
Leotec - Sensorik GmbH Co KG
Neubauzeile 101
4030 Linz
Austria
Tel.: +43 732 77 48 48 0
Fax: +43 732 77 48 48 9
eMail: office@leotec.at
http://www.leotec.at
Contact: Ing. Christoph Haginger

South Africa
ATI Systems (Pty) Ltd.
159 Galjoen Road
Wadeville 1428
South Africa
Tel: +27 11 383 8300
Fax: +27 11 824 1353
eMail: sales@atisystems.co.za
http://www.atisystems.co.za
Contact: Mr. Wim Annandale

Spain
Iberfluid Instruments S.A.
Botànica, 122
08908 Hospitalet de Llobregat
Espania
Tel.: +34 93 333 36 00
Fax: +34 93 334 05 24
eMail: myct@iberfluid.com
http://www.iberfluid.com
Contact: Mr. Angel Jané

Sweden
Sensor Control Nordic AB
Sollentunavägen 49
19140 Sollentuna
Sweden
Tel.: +46 8 668 2100
Fax: +46 8 669 0110
eMail: anders.olofsson@scn.se
http://www.scn.se
Contact: Mr. Anders Olofsson

Switzerland
Omni Ray AG
Im Schörli 5
8600 Dübendorf
Switzerland
Tel.: +41 44 80 22 880
Fax: +41 44 80 22 828
eMail: info@omniray.ch
http://www.omniray.ch
Contact: Mr. Markus Leemann

Turkey
OTKON MÜHENDiSLiK ve ELEKTRiK SAN. TiC. LTD. STi.
Perpa Ticaret Merkezi
A Blok Kat: 5 No: 305
34 384 Okmeydani-Istanbul
Turkey
Tel.: +90 212 320 23 60
Fax: +90 212 320 23 62
eMail: bayrama@otkon.com.tr
http://www.otkon.com.tr
Contact: Mr. Bayram Akkaya

www.mtssensor.com
www.temposonics-shop.de

Document Part Number: 551303 Revision A (EN) 3/2012

MTS®
SENSORS

Germany
MTS Sensor Technologie
GmbH & Co. KG
Auf dem Schüffel 9
58513 Lüdenscheid, Germany
Tel.: +49-2351-9587-0
Fax: +49-2351-56491
info@mtssensor.de
www.mtssensor.com

USA
MTS Systems Corporation
Sensors Division
3001 Sheldon Drive
Cary, NC 27513, USA
Tel.: +1-919-677-0100
Fax: +1-919-677-0200
sensorsinfo@mts.com
www.mtssensors.com

Japan
MTS Sensors Technology Corp.
737 Aihara-cho,
Machida-shi
Tokyo 194-0211, Japan
Tel.: +81-42-775-3838
Fax: +81-42-775-5516
info@mtssensor.co.jp
www.mtssensor.co.jp